C.H.I.

OVERHEAD DOORS

Installation Instructions

Residential Sectional Doors

C.H.I. RESIDENTIAL OVERHEAD DOOR INSTALLATION INSTRUCTIONS

These instructions will show you how to install a C.H.I. Residential door. They are for the mechanically experienced person who has proper tools to perform the job. They are not meant to infringe upon or supersede any State or County building codes or safety regulations.

Table of Contents

Before You Begin... _____ this page
Tools and Material _____ page 3
Door Components _____ page 3
Removing the Existing Door _____ page 6
Opening Preparation _____ page 7
Installing Your New Door
- **Sections and Hardware** _____ page 9
- **Struts** _____ page 13
- **Track** _____ page 14
- **Springs** _____ page 18

Low Headroom Details _____ page 27
Suppemental Instructions
- **Incline Track** _____ page 33
- **Gripping Point Kit** _____ page 34
- **Outside Lock** _____ page 35

Before You Begin...

Read and be sure that you completely understand all of the steps and warnings as outlined prior to beginning installation!

Safety First. Safety warnings are clearly marked with a ☑ **Warning!** symbol. A garage door is the single largest operating mechanism in your home. It is a wonderful convenience when used safely and responsibly. It can also cause the most harm when not used correctly. Observe all guidelines and warnings given in the instructions during installation and then review and post Maintenance and Warnings at back of booklet near the door for future reference.

If you plan to use an existing door opener, check it for current safety features. This is the time to update your operator to assure yourself of the safest door system possible.

☑ **Warning! If you are removing an existing door, only an experienced person should release the spring tension. The spring is the most dangerous part of your door. It is charged with force at all times and this force must be properly and safely released before removing any part of your existing door. Serious injury or death may result if you attempt to loosen or remove any part of the spring system whether it is attached to the door or to the wall before releasing all of this spring force.**

☑ **Warning! Wear protective gloves and eye wear when working on your door.**

☑ **Warning! Strong winds or gusts can cause a partially installed door to fall.**

Copyright 2000 C.H.I. Overhead Doors 8/19

Tools and Material Required to Install Your New Garage Door

Tools you will need

Claw Hammer
Flat Head Screwdriver
Pliers
Tape Measure
Socket Wrench Set
Variable Speed Drill
  3/16" drill bit
  7/16" nut driver bit *
Chalk
Level
Locking Pliers
Step Ladder
Saw Horses
For torsion springs
Winding Bars
  (see warning page 21)
7/16" 12 pt. closed end
  wrench or socket
For outside lock
1/2" drill bit
For outside pull handle
1/2" and 1/4" drill bits

* sandwich type door sections do not have pre-punched holes for fasteners.

Materials not supplied with your door

(6) 5/16" x 1-3/4" wood lags	(track hangs)
(4) 5/16" x 4" wood lags	(torsion spring mount)
(8) 5/16" x 1" bolts, washers and nuts	(track hangs)
(10) 20 penny nails	(section stacking)
Rope (minimum safe work load limit of 400 pounds)*	(temporary horizontal curve track support)
Pre-punched steel angle (1-1/2" x 1-1/2" x 3/32" min.)*	(track hangs)
Stop molding and nails	(door trim)
Reinforcing strut (if not standard)	(operator mounting)
C.H.I. operator mounting plate for 10' and 12' door widths, on sandwich type doors	(operator mounting)

*The amount of rope and steel angle required to hang your door tracks depends on the distance from the door tracks to the ceiling of your garage. Refer to pages 16 and 17 for details.

If you are using steel angle to support a door opener, refer to the opener instructions for the correct type and length.

When purchasing stop molding, you will need one piece for the top of the opening and two pieces for the sides. Refer to Page 9 for details.

Door Components

Check door model that you have. Door size and model are marked on the hardware carton label and spring tag.

Sample Hardware Carton Label

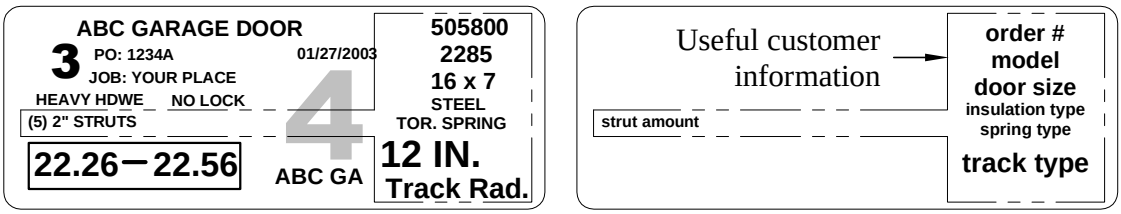

Next, check your parts and organize them so you will have what you need when you need it. The installation of your new door has been outlined into three main groups; **Sections and Hardware, Track** and **Springs** (torsion or extension). If your door has **Low Headroom,** an **Outside Pull Handle** or an **Outside Lock**, additional details and parts lists are at the back of the booklet (see table of contents). If your door size is different from the sizes listed here, the steps needed to install the door are the same. You will have a few additional parts which will be easily recognized as to their placement and function as you study the parts list.

Please be sure that you can identify each part and understand its function. This will help ensure a safe and sound installation.

Section and Hardware Components (page 9)

Door Size Legend

Find the letter that corresponds to the size of your door. Then check for the quantity of each part that matches your letter.

Door Width	Door Height 6'6"	7'0"	7'6"	8'0"
8'	A	A	B	B
9'	A	A	B	B
16'	C	C	D	D

Door Sections

Size	Qty
A	4
B	5
C	4
D	5

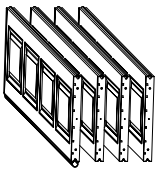

(same length as door width: these are very large parts)

#1 End Hinge

Page 10 & 14

Size	Qty
A	2
B	2
C	2
D	2

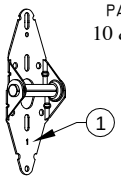

(in hardware carton)

#2 End Hinge

Page 12 & 14

Size	Qty
A	2
B	2
C	2
D	2

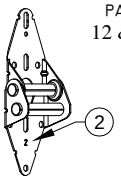

(in hardware carton)

#3 End Hinge

Page 14

Size	Qty
A	2
B	2
C	2
D	2

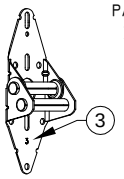

(in hardware carton)

#4 End Hinge

5 section doors only

Size	Qty
A	0
B	2
C	0
D	2

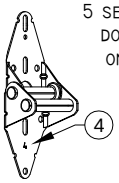

(in hardware carton)

#1 Center Hinge

Page 10 & 12

Size	Qty
A	3
B	4
C	9
D	12

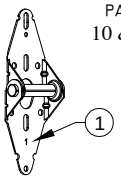

(in hardware carton)

Bottom Fixture (Pair)

Page 10 & 15

Size	Qty
A	1
B	1
C	1
D	1

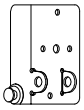

(in hardware carton)

Top Fixture

Page 13 & 16

Size	Qty
A	2
B	2
C	2
D	2

(in hardware carton)

Roller

Page 10&12

Size	Qty
A	10
B	12
C	10
D	12

(in hardware carton)

Inside Step Plate

Page 9

Size	Qty
A	1
B	1
C	1
D	1

(in hardware carton)

Rolled Grip Handle

Page 12

Size	Qty
A	1
B	1
C	1
D	1

(in hardware carton)

Strut

Page 13

Size	Qty
A	0
B	0
C	1
D	*3

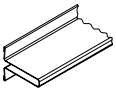

(1/4" less than section width: this is a very large part)

Eye Screw

Page 17

Size	Qty
A	1
B	1
C	1
D	1

(in hardware carton)

Pull Rope

Page 17

Size	Qty
A	1
B	1
C	1
D	1

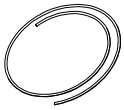

(in hardware carton)

1/4" Self Drilling Screw

Size	Qty
A	48
B	60
C	82
D	112

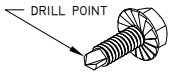

Model 2285 Only
(in hardware carton)

Red 1/4" Self Drilling Screw

Page 10

Size	Qty
A	8
B	8
C	8
D	8

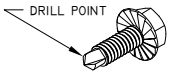

bottom fixture screws
(in hardware carton)

1/4" Sheet Metal Screw

Size	Qty
A	48
B	60
C	82
D	112

Not used on Model 2285
(in hardware carton)

* 3 struts on a pan door and 1 strut on a sandwich door

☑Warning! Fasteners used to attach bottom fixtures and torsion spring support must be painted red.

☑Warning! Do not remove red bolts attaching the bottom fixture or torsion spring support while springs are under tension.

Track Components (page 14)

Door Size Legend

Find the letter that corresponds to the size of your door. Then check for the quantity of each part that matches your letter.

Door Width	Door Height 6'6"	7'0"	7'6"	8'0"
8'	A	A	B	B
9'	A	A	B	B
16'	C	C	D	D

Vertical Track (pair)

page 14

Size	Qty
A	1
B	1
C	1
D	1

(8" less than door height: this is a very large part)

Horizontal Curve Track (pair)

page 16

Size	Qty
A	1
B	1
C	1
D	1

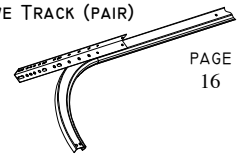

(at least 14" longer than door height: this is a very large part)

Flag Angle (pair)

page 14

Size	Qty
A	1
B	1
C	1
D	1

(in hardware carton)

Track Brackets (marked #5.5, #6 and #7)

page 14

Size	#5.5 Qty	#6 Qty	#7 Qty
A	2	2	0
B	2	2	2
C	2	2	0
D	2	2	2

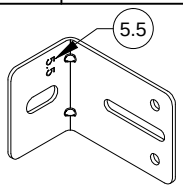

(in hardware carton or attached to track)

1/4" x 5/8" Track Bolt and Hex Nut

page 14 & 16

Size	Qty
A	12
B	14
C	12
D	14

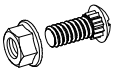

(in hardware carton)

3/8" x 3/4" Carriage Bolt and Hex Nut

page 16 & 19

Size	Qty
A	2
B	2
C	2
D	2

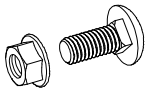

(in hardware carton)

5/16" x 1-5/8" Wood Lag Screw

page 15

Size	Qty
A	10
B	12
C	10
D	12

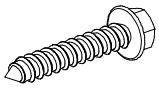

(in hardware carton)

Torsion Spring Components (page 18)

Door Size Legend

Find the letter that corresponds to the size of your door. Then check for the quantity of each part that matches your letter.

Door Width	Door Height 6'6"	7'0"	7'6"	8'0"
8'	A	A	B	B
9'	A	A	B	B
16'	C	C	D	D

Torsion Shaft

page 20

Size	Qty
A	1
B	1
C	1
D	1

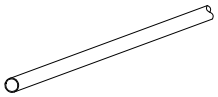

(at least 10" longer than door width: a very large part)

Torsion Spring

page 20

Size	Qty
A	1
B	1
C	2
D	2

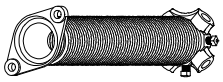

(on torsion shaft)

Nylon Bearing

page 20

Size	Qty
A	1
B	1
C	1
D	1

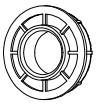

(on torsion shaft)

Cable Drum (pair)

page 20

Size	Qty
A	1
B	1
C	1
D	1

(in hardware carton)

Lift Cable

Size	Qty
A	2
B	2
C	2
D	2

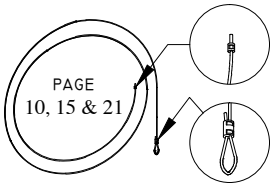

(in hardware carton)

End Bearing Plate (pair)

page 19

Size	Qty
A	1
B	1
C	1
D	1

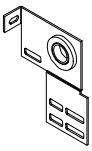

(in hardware carton)

3/8" x 3/4" Carriage Bolt and Hex Nut

page 19

Size	Qty
A	4
B	4
C	4
D	4

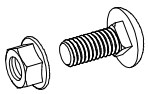

(in hardware carton)

Spring Support

page 19

Size	Qty
A	1
B	1
C	1
D	1

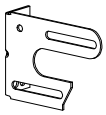

(in hardware carton)

Red 5/16" x 1-5/8" Wood Lag Screw

page 19

Size	Qty
A	4
B	4
C	4
D	4

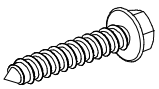

spring support screws
(in hardware carton)

3/8" x 1-1/2" Bolt and Hex Nut

page 20

Size	Qty
A	2
B	2
C	2
D	2

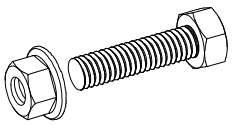

(in hardware carton)

Read and be sure that you completely understand all of the steps and warnings as outlined prior to beginning installation.

Extension Spring Components (page 23)

Door Size Legend

Find the letter that corresponds to the size of your door. Then check for the quantity of each part that matches your letter.

Door Width	Door Height 6'6"	7'0"	7'6"	8'0"
8'	A	A	B	B
9'	A	A	B	B
16'	C	C	D	D

Extension Spring

Size	Qty
A	2
B	2
C	2
D	2

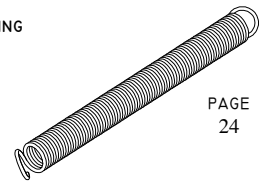

page 24

(in hardware carton)

Spring Cable

page 25

Size	Qty
A	2
B	2
C	2
D	2

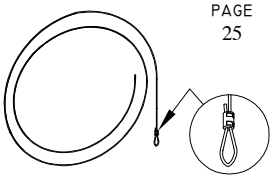

(in hardware carton)

Safety Cable Kit

Size	Qty
A	2
B	2
C	2
D	2

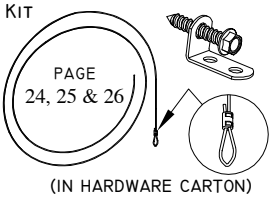

page 24, 25 & 26

(in hardware carton)

Pulley

page 23, 24 & 25

Size	Qty
A	4
B	4
C	4
D	4

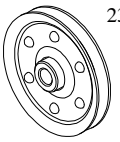

(in hardware carton)

Clevis

page 24

Size	Qty
A	2
B	2
C	2
D	2

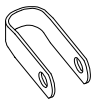

(in hardware carton)

Cable Clip

page 25

Size	Qty
A	2
B	2
C	2
D	2

(in hardware carton)

S Hook

page 25

Size	Qty
A	2
B	2
C	2
D	2

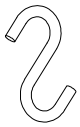

(in hardware carton)

3/8" x 1-1/2" Bolt and Hex Nut

page 23

Size	Qty
A	4
B	4
C	4
D	4

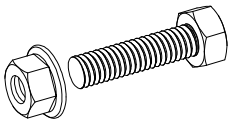

(in hardware carton)

5/16" x 3-3/4" Eye Bolt and Hex Nuts

Size	Qty
A	2
B	2
C	2
D	2

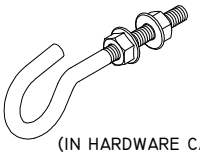

page 24

(in hardware carton)

For Low Headroom components see page 27.

Removing the Existing Door

☑Warning! If you are removing an existing door, only an experienced person should release the spring tension. The spring is the most dangerous part of your door. It is charged with force at all times and this force must be properly and safely released before removing any part of your existing door. Serious injury or death may result if you attempt to loosen or remove any part of the spring system whether it is attached to the door or to the wall before releasing all of this spring force.

☑ Warning! Door components can be heavy and awkward. Caution should be used whenever lifting or carrying to avoid personal injury or property damage. Make sure adequate help is available before continuing with the installation.

With the spring system disassembled you can now remove the remaining parts of your old door. Start by carefully removing hardware from top section and lifting it out of the opening.

After sections have been removed from work area, unbolt any existing track and hardware. Promptly remove all old material from work area.

☑Warning! Due to many different types of overhead doors it is important not to reuse any parts from your old door; even if they appear to be in good working condition. Your new door has been supplied with the specialized parts required to complete the installation. The common parts you will need to supply are listed on page 3. Please review this list if you have not already done so.

Opening Preparation

Check opening size and door size.
Door size and type are marked on the hardware carton label and spring tag. Check this information and compare it with the actual opening size. Also check side room, headroom and back depth dimensions.

SAMPLE HARDWARE CARTON LABEL

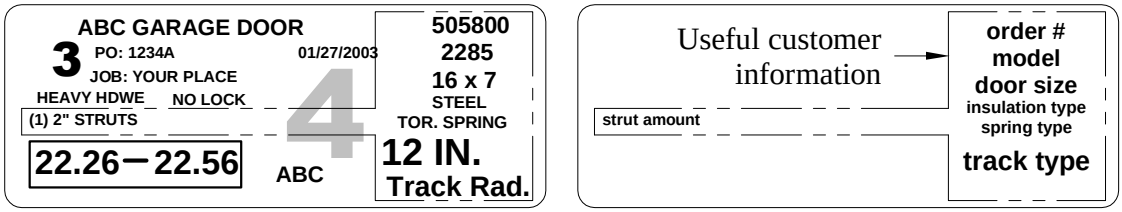

OPENING REQUIREMENTS
(FOR LOW HEADROOM SEE PAGE 27)

TRACK MOUNTING	OPENING WIDTH	OPENING HEIGHT
BRACKET MOUNT	SAME AS DOOR WIDTH	SAME AS DOOR HEIGHT

SIDE ROOM REQUIREMENTS
(FOR LOW HEADROOM SEE PAGE 27)

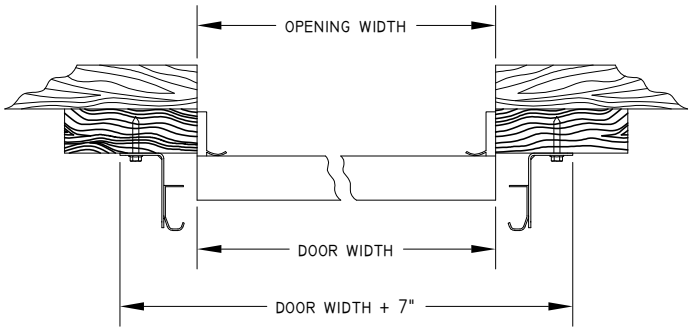

WHENEVER POSSIBLE ALLOW MORE SIDE ROOM FOR EASE OF INSTALLATION.

HEADROOM AND BACK DEPTH REQUIREMENTS
(FOR LOW HEADROOM SEE PAGE 27)

TRACK RADIUS	SPRING TYPE	HEADROOM
12" R	EXTENSION	10"
	TORSION	12"
15" R	EXTENSION	12"
	TORSION	15"

MINIMUM VALUES SHOWN. WHENEVER POSSIBLE ALLOW MORE HEADROOM FOR EASE OF INSTALLATION. ADD 4" TO HEADROOM IF YOU ARE USING A DOOR OPENER.

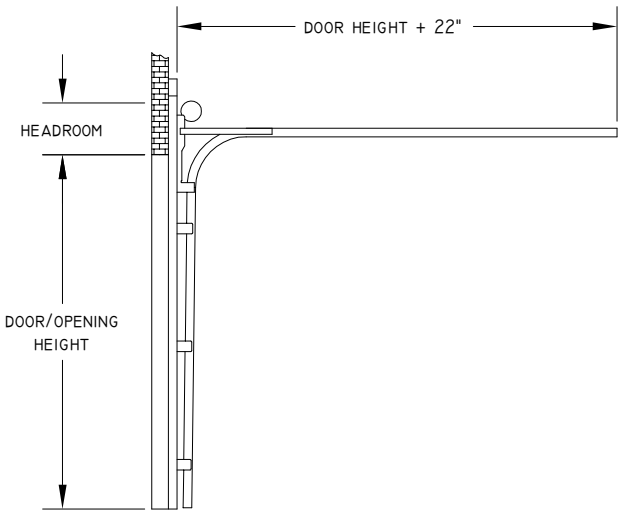

After you have checked that the door will fit, prepare the opening.
It is very important that the opening is correctly prepared before installing tracks and springs. All mounting surfaces must be structural components and not covered with drywall, paneling or any other building material. The materials listed here are not supplied with the door.

Torsion Spring Mounting Area is where the torsion springs will mount to. It must be flush with the header and reinforced to a structural member with (4) 5/16" x 4" wood lags. Not required with extension springs.

Header Plate provides a surface for the door to seal against. It must be level and flush with the jamb plates.

Jamb Plates support the door tracks. Make sure that they are plumb and square with the header plate.

Recommended Wood Framing Sizes

JAMB PLATE	2 X 6
HEADER PLATE	2 X 8
SPRING MOUNT	2 X 10

Wood Framing should be Southern Pine or better structural species, grade2/better, free of cracks, splits and knots.

TRACK RADIUS	SPRING TYPE	"A" DIMENSION
STD. LIFT 12" R	EXTENSION	8"
	TORSION	12"
STD. LIFT 15" R	EXTENSION	11"
	TORSION	15"

FOR LOW HEADROOM SEE PAGE 26

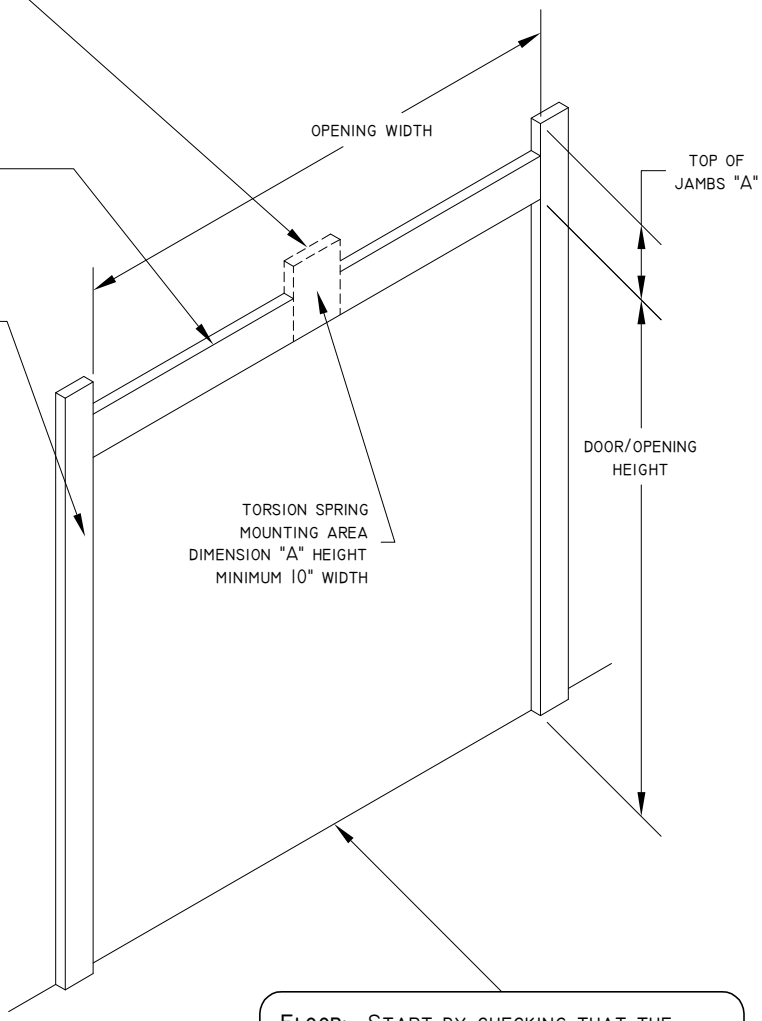

Floor: Start by checking that the floor is level and smooth. The door has a weather seal on the bottom that will adjust to minor irregularities.

☑ **Warning! Attachment of the jamb plates, header plate and torsion spring mounting area to building framework must provide adequate support to sustain the weight of the door, track and spring assemblies as well as resistance to wind load forces and vibration caused by door operation.**

Temporarily attach stop molding to the jambs and header as shown.

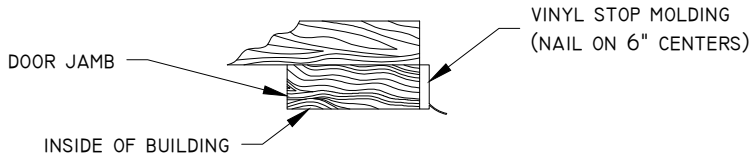

The stop molding will prevent door sections from falling through the opening when stacked in place.

Sections and Hardware

Attach hardware to bottom section.
Look for the section with weather seal attached to it. This is the bottom section. Set it on saw horses face down (the face is the outside of the door). Apply all hardware before setting section into opening. Refer to tag on the hardware carton to see if this door will have struts. If so, see page 13.

Attach inside step plate and outside bottom gripping point.

LOCATE THE TWO HOLES ON THE BOTTOM SECTION AS SHOWN. ATTACH INSIDE STEP PLATE USING TWO 1/4" SHEET METAL SCREWS. SEE PAGE 35 IF USING THE OPTIONAL OUTSIDE BOTTOM GRIPPING POINT

SANDWICH TYPE DOORS DO NOT HAVE EXPOSED STILES. CENTRALLY LOCATE INSIDE STEP PLATE USING MARKS AS SHOWN.

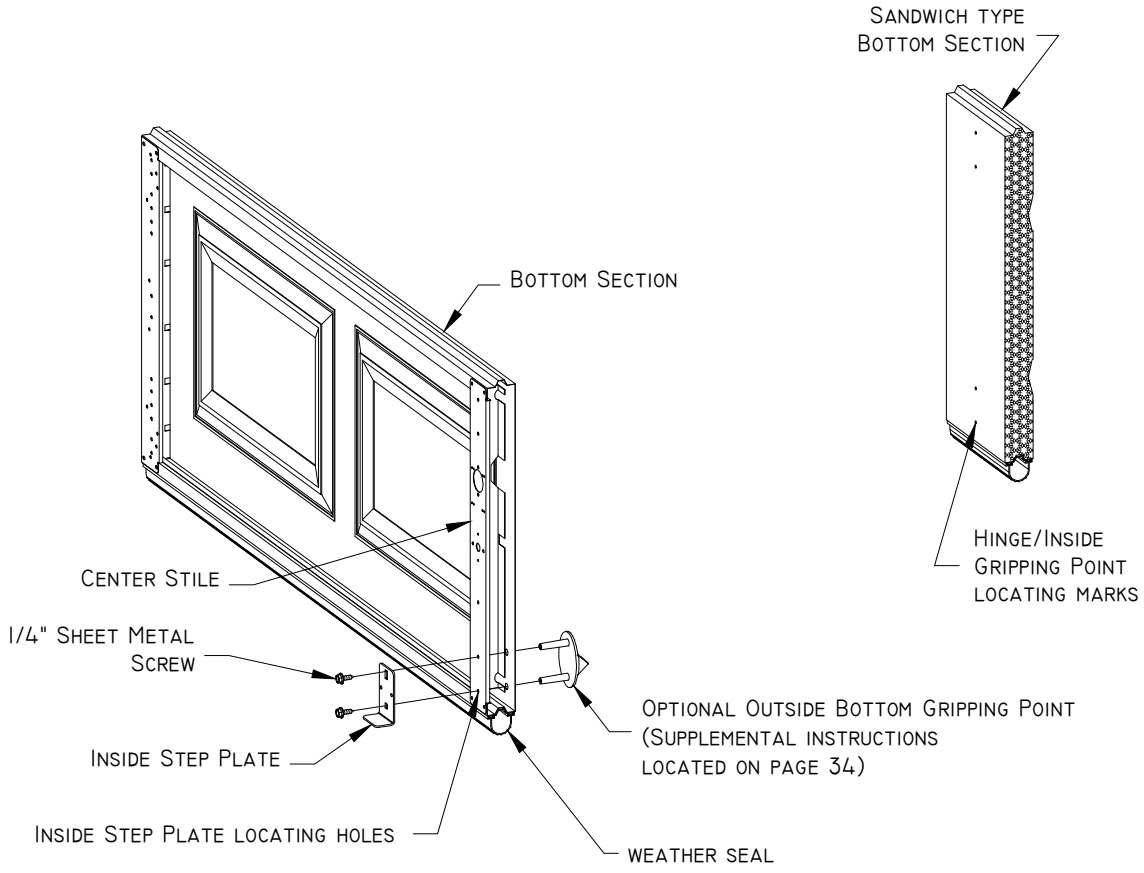

STEP 3

Sections are attached to each other with hinges. Fasten hinges marked #1 to top of bottom section at each stile using (2) 1/4" sheet metal screws per hinge. Make sure that the two slots are at top of hinge. This allows for adjustment when you stack sections. Attach each bottom fixture with (4) red 1/4" sheet metal screws.

STEP 4

The Door is held in the track with rollers. Insert rollers into bottom fixtures and end hinges.

STEP 5

The door is raised and lowered by lift cables. Attach cables to bottom fixtures if installing torsion springs (one mounted on each side of the bottom section). Do not attach lift cables, at this time, if installing extension springs see step 6, page 25.

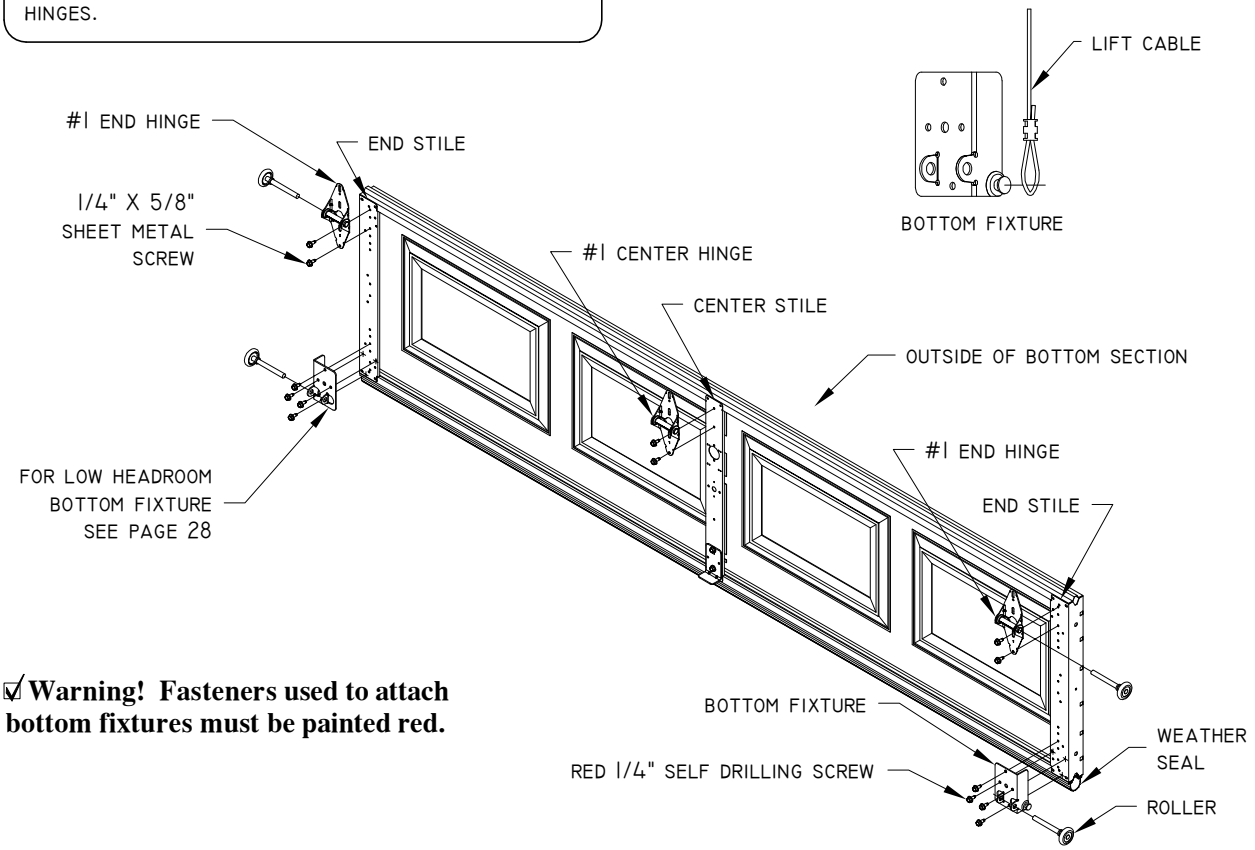

☑ **Warning! Fasteners used to attach bottom fixtures must be painted red.**

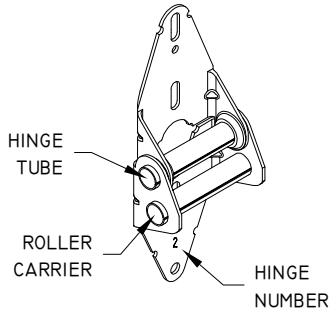

End Hinge progression.
To allow door to 'breakaway' from jambs, the vertical tracks are angled out from the wall. See page 14 for end hinge placement. End hinges are designed to match the angle of the track. As hinge numbers increase so does distance from hinge tube to roller carrier.

Place bottom section in the opening and mark reference lines for tracks.

STEP 6

Center and level bottom section in opening. If there is a gap on one end at the floor then the track will not rest on the floor by the same amount. Check this when vertical tracks are in place.

STEP 7

Drive a 20 penny nail into jamb next to section edge. Bend head of nail over the end stile to hold section in place. Do this to each end of the section. Check that nails are driven firmly into jamb.

STEP 8

After section is leveled, measure up from bottom rail (do not measure from the vinyl weather seal) same distance as door height and mark a reference line on the jamb.

STEP 9

Measure down from the reference line 8" (14" for low head room) and mark a level reference line across both jambs. This is where the lower vertical and upper horizontal tracks will meet.

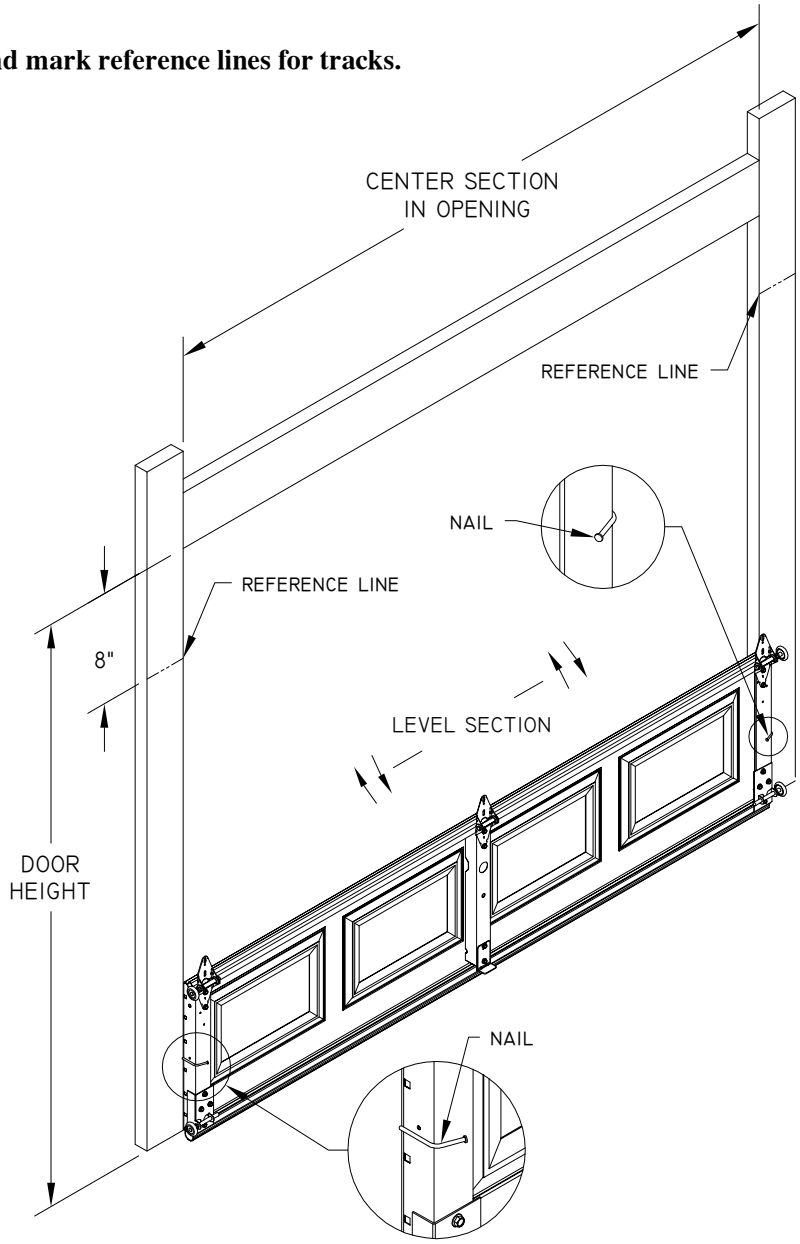

Selecting a top section.
Use a 21" high section when available, otherwise use an 18" section.

If the door is or will be electrically operated, the operator must attach to a structural part of the section. Use centermost stile of section for this purpose. A center stile is factory attached to the top section when there is an even number of hinge locations. Sandwich type doors, 10' and 12' wide, will not have a centermost stile; a C.H.I. Operator Mounting Plate must be used. This mounting plate is not included in a standard hardware box (see materials not supplied listed on page 3).

Top fixtures will be used instead of end hinges to allow adjustment of door against header. Install top fixtures after upper tracks are in place (see page 16). If a strut is required on this section, install it now (see page 13).

Set the selected top section aside until step 4, page 14.

Attach hardware to #2 section.
Use a 21" high section when available, otherwise use an 18" section.

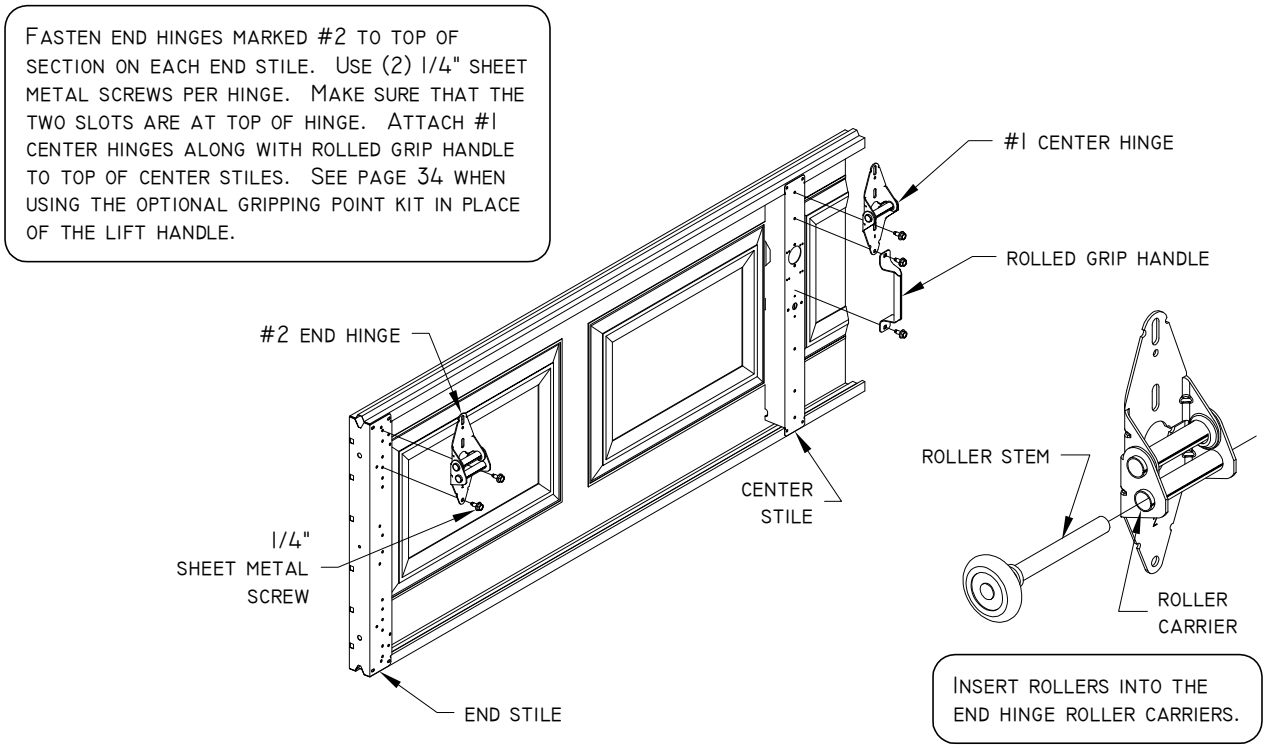

Attach hardware to #3 section.
Review all previous steps and make sure they have been followed correctly. Clean work area of any debris and packing material.

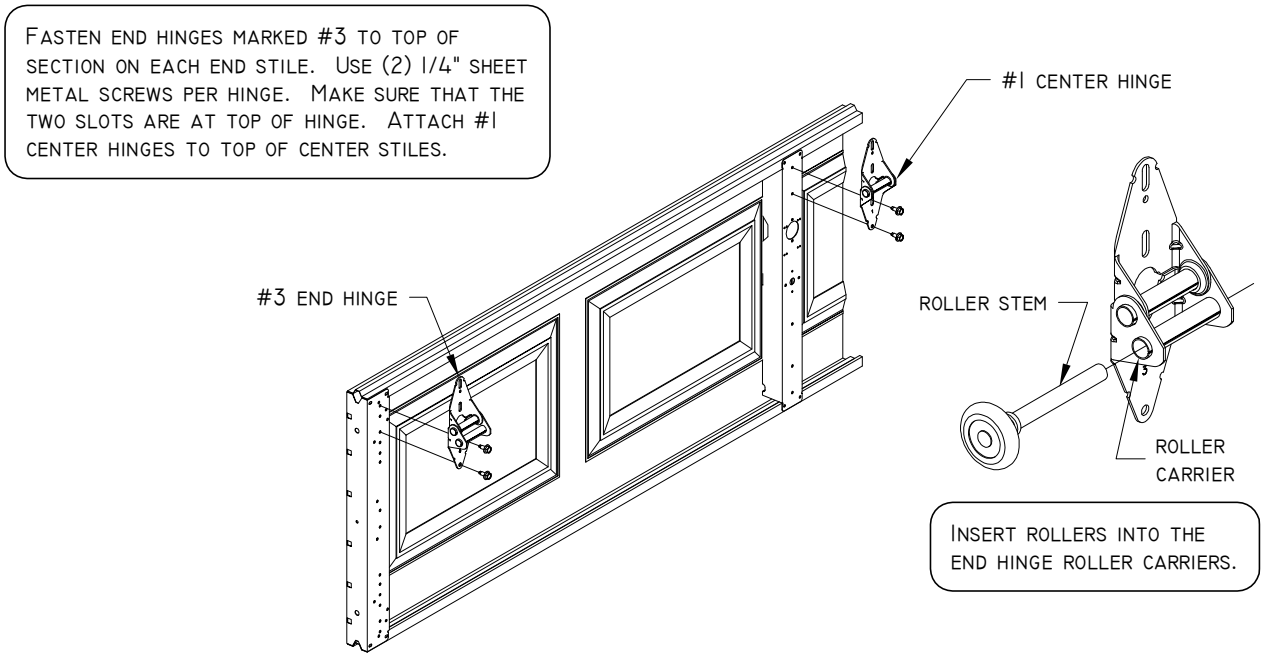

For each added section you will use different end hinges. A #4 section will use #4 end hinges. A #5 section will use #5 end hinges and so on.

Struts.
The top section of an electrically operated door must include a reinforcing strut.
☑**Warning! Installing an operator without a top section reinforcing strut will void warranty.**

Doors supplied with one strut: use on top section.

Locate edge of top fixture approximately 1" down from section shoulder. Holes in stile will line up with fixture. Slide strut under top fixture and mark it's position. Use 1/4" self drilling screws to attach strut to center and end stiles. Holes in strut may not line up with holes in stiles. Top fixtures will be attached after horizontal tracks are in place.

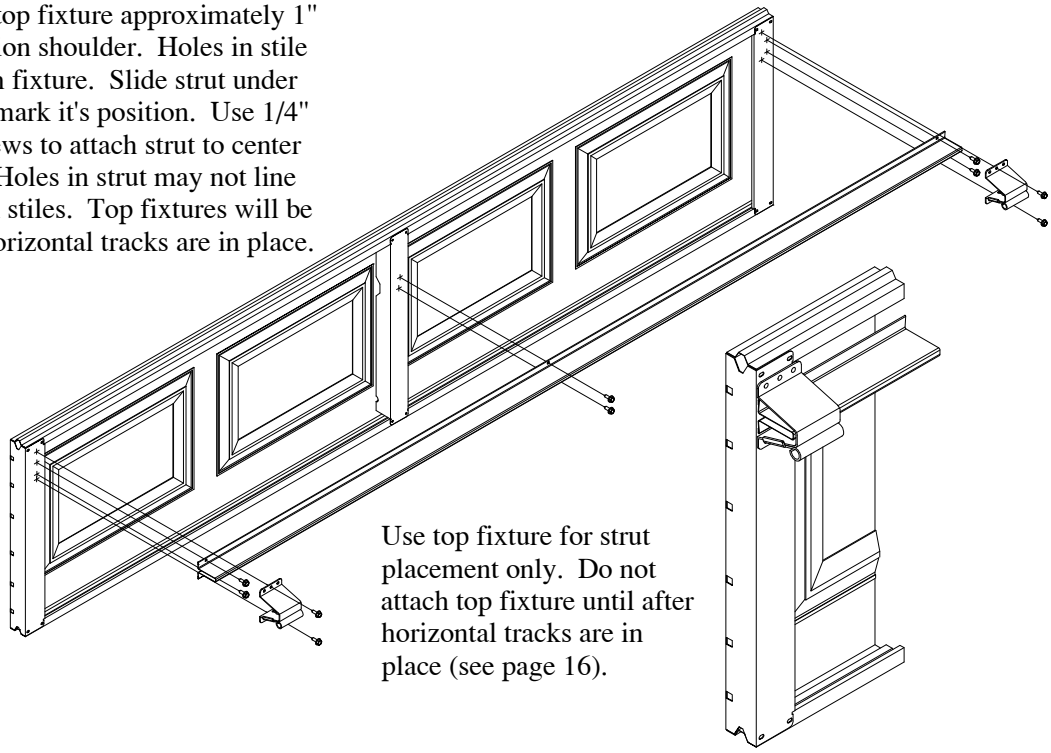

Use top fixture for strut placement only. Do not attach top fixture until after horizontal tracks are in place (see page 16).

Doors supplied with two or more struts.

Two struts.
Install one on top section as shown above. Install one on the hinge line half way up door.

Three struts.
Install third strut on top of bottom section.

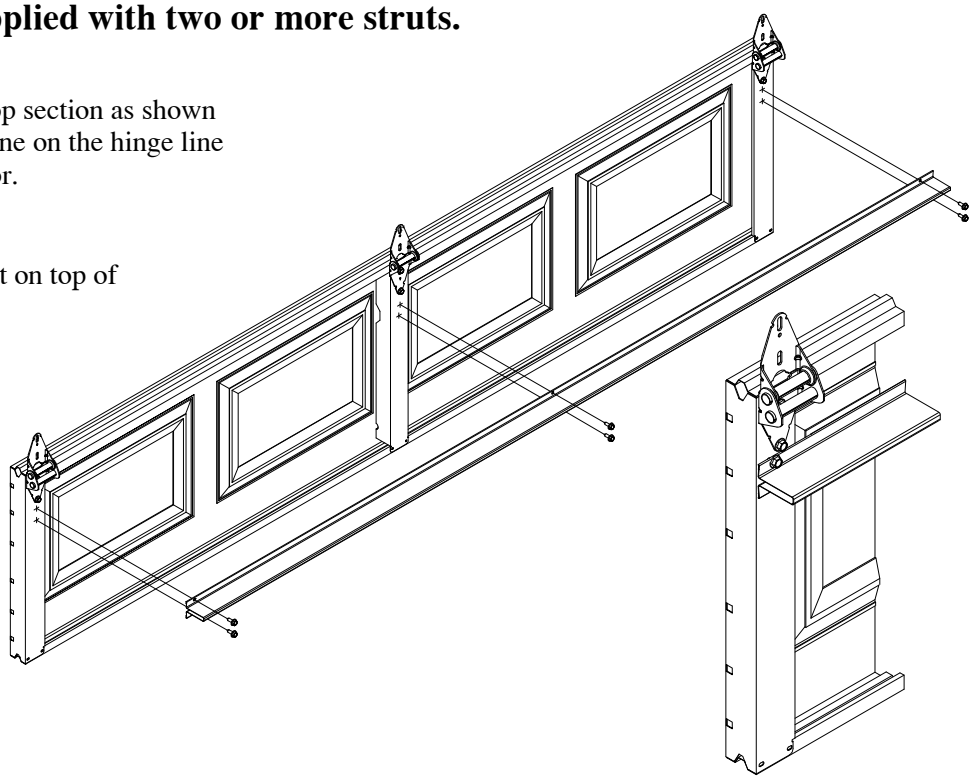

Stack the sections in the opening.

STEP 1

Stack #2 section (with #2 end hinges) on top of bottom (#1) section.

STEP 2

Drive a 20P nail into jamb next to section edge. Bend head of nail over the end stile to hold section in place. Do this to both ends of the section. Repeat this step with each section as you stack it in the opening. Check that nails are firmly driven into jamb.

STEP 3

With #2 section held in place flip up the hinges which are attached to top of bottom section and attach them to the #2 section with 1/4" sheet metal screws.

STEP 4

Continue to stack sections and attach hinges. For each section added, check that hinges are in ascending order. The top section will not have end or center hinges.

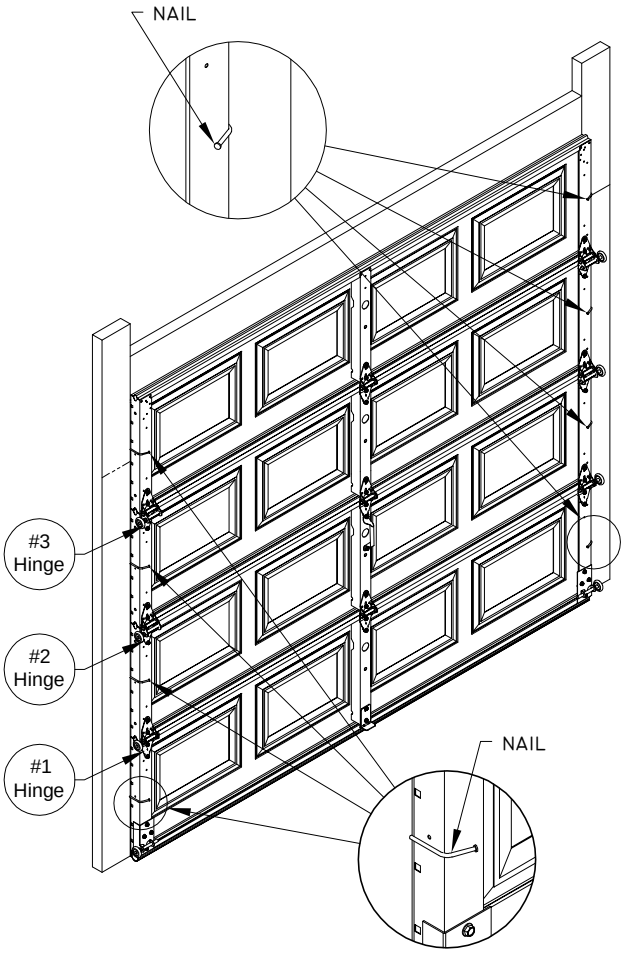

Track Installation

Prepare the vertical tracks.

STEP 1

The top of the vertical track must pitch back from the jamb for door to seal properly. This spacing is set by use of graduated track brackets. Attach but do not fully tighten brackets to track with 1/4" x 5/8" track bolts and nuts. The detail is shown with two different track brackets. Your door may have more depending on door height.

Always place heads of bolts to inside of the track. This will prevent rollers from striking bolts.

STEP 2

The flag angle mounts to the top of the track with (2) 1/4" x 5/8" track bolts and nuts. This bracket joins the vertical and horizontal tracks as well as the angle attached to the horizontal track. Leave bolts loose at this time. You will adjust the track after it is installed to the jambs.

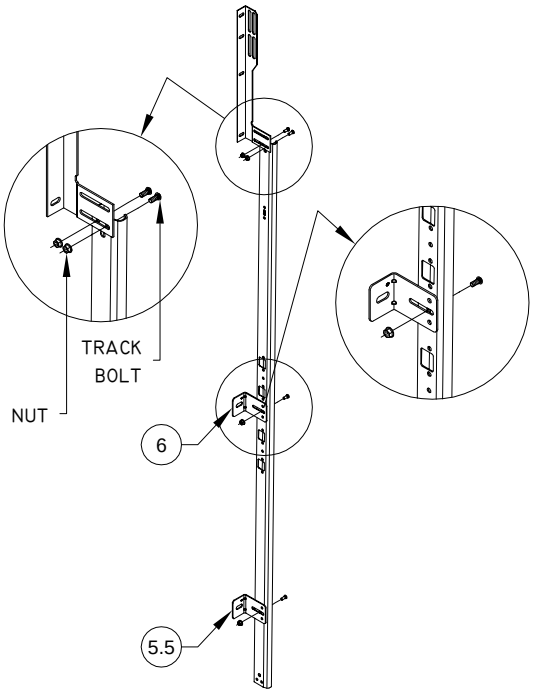

Install vertical tracks.
If your door has torsion springs, attach lift cables to bottom fixtures before installing vertical tracks. Then bring cable up behind roller shafts. This will save you from having to thread the cables after the track is installed.

STEP 1

Slip left hand vertical track over rollers with a twisting motion.

STEP 2

Position top of vertical track even with the reference line that you marked on the jambs. Temporarily fasten track to jamb to keep it at correct height. You will need to be able to plumb the track once the spacing at the bottom is set.

STEP 3

Space bottom of track leaving a 1/2" opening between track and door sections. Fasten bottom track bracket to jamb with 5/16" x 1-5/8" wood lag (always drill 3/16" pilot holes for wood lags).

STEP 4

Now loosen top of track and plumb it with the bottom. Check to make sure that the 1/2" spacing at the bottom did not change. Attach flag angle to the jamb with (3) 5/16" x 1-5/8" wood lags.

STEP 5

Continue to fasten track assembly to jamb with wood lags.

STEP 6

Check that rollers are not binding in the track and tighten track brackets to track.

STEP 7

Set right hand track in the same manner as the left hand track.

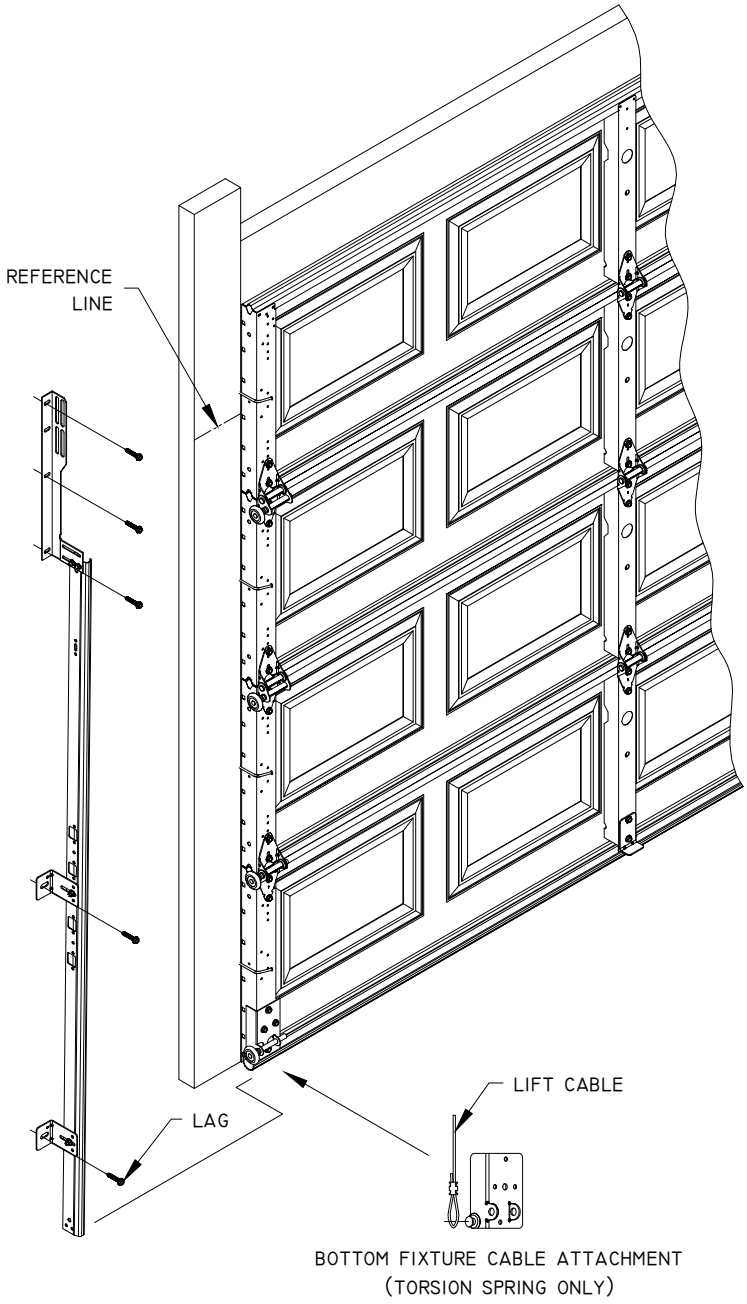

STEP 8

After installing vertical tracks, remove nails from door jamb except those holding the top section. These will be removed after top fixtures are installed.

Horizontal track installation.
(low headroom supplemental details page 28)

STEP 1

Use rope as a temporary support for the back of the horizontal curve track. Align rope with vertical track. Attach it to a structural overhead member.

STEP 2

Tie a loop in the rope that will hold the track in an approximate level position. Slide end of track into the loop. Lift track in place.

STEP 3

Fasten horizontal curve track to flag angle with (2) 1/4" x 5/8" track bolts and nuts. Always place heads of bolts to inside of the track. This will prevent rollers from striking bolts.

STEP 4

Fasten angle (attached to horizontal curve track) to flag angle with 3/8" x 3/4" carriage bolt and nut. Always place heads of bolts on same side as the door sections. This will prevent door from striking bolts.

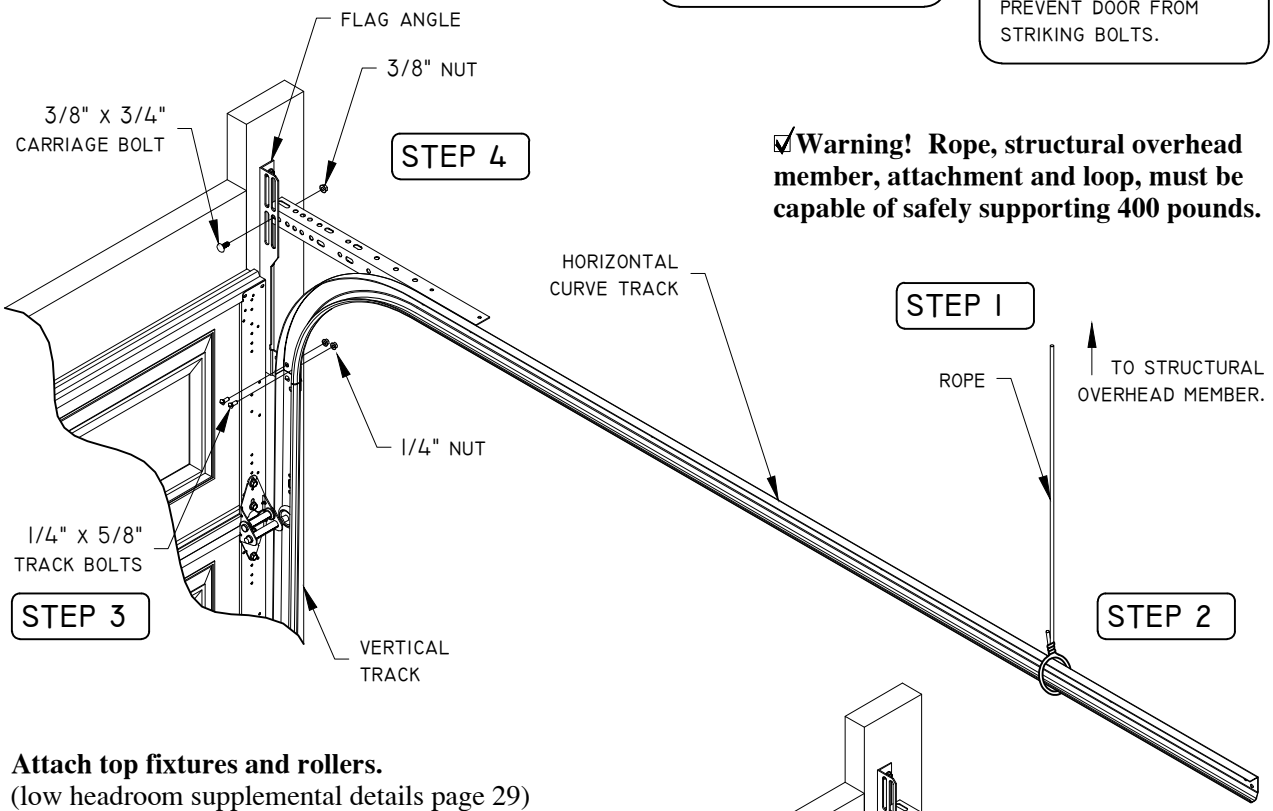

☑**Warning! Rope, structural overhead member, attachment and loop, must be capable of safely supporting 400 pounds.**

Attach top fixtures and rollers.
(low headroom supplemental details page 29)

Finish applying door hardware by attaching top fixtures and rollers to the top section.

Insert a roller into the track. Loosen adjustment bolt in top fixture. Slip roller stem into roller carrier. Position top fixture about 1" from section top. Holes in fixture will line up with holes in end stiles. Attach top fixture with 1/4" sheet metal screws. Adjust top fixture roller carrier so door seals firmly against stop molding. Remove nails.

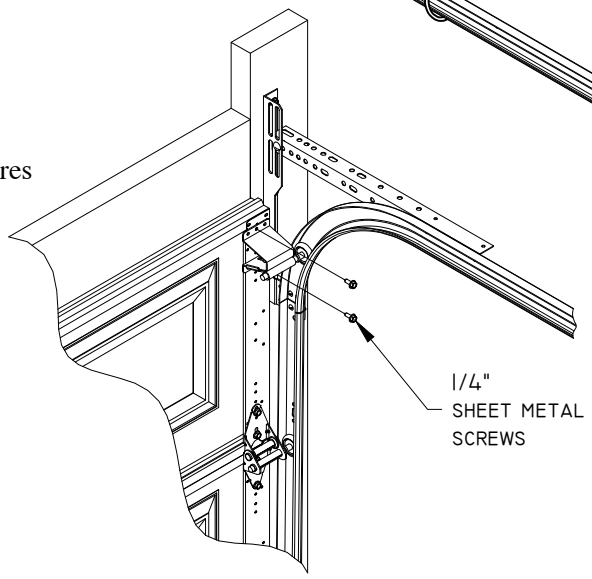

Install track hangs.

☑Warning! This will require manually lifting the door halfway into the open position. Your door is heavy and will require more than one person to lift it. Make sure adequate help is available before continuing.

If your door has torsion springs, the springs can be installed first (refer to page 18). This will assist you in raising the door.

☑Warning! Never place your fingers in or near section joints while the door is moving!

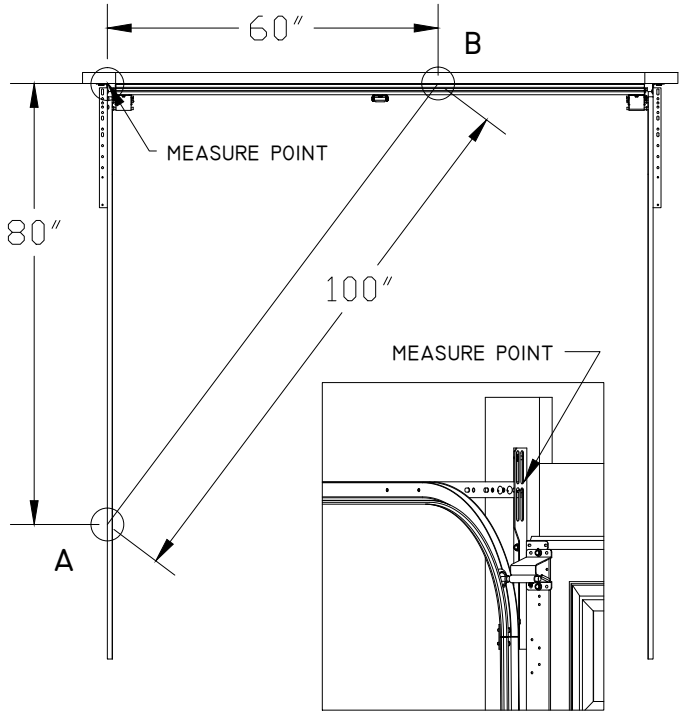

STEP 1

Slowly raise door halfway to check that it will freely roll through curve portion of the track. Return door to fully closed position. If door binds check clearance between door and track. Also, check that rollers are not striking track bolt heads.

STEP 2

Horizontal tracks must be square with the header. To check for squareness, measure from where left hand flag bracket attaches to wall back along horizontal track 80". Mark point A. Measure from flag bracket across header 60" and mark point B. Adjust back of track inward or outward until distance is 100". Using your level, mark this location on ceiling. Repeat for right hand horizontal track.

STEP 3

Assemble track hangs as shown using 1-1/4" X 1-1/4" X 13 ga. angle and 5/16" X 1" bolts, washers and nuts. Anchor each track hang to a structural ceiling member with (3) 5/16" X 1-3/4" wood lags. Lift rear of horizontal tracks one inch above level and attach track hangs with 5/16" X 1" bolts, washers and nuts.

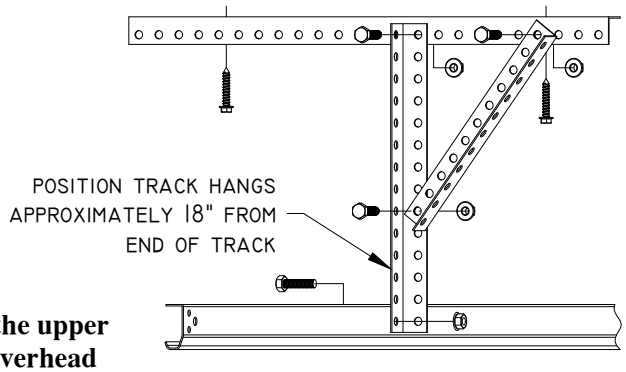

☑Warning! Failure to securely support and brace the upper track assembly can cause the door to fall from the overhead position and result in serious personal injury or death.

Attach the pull rope.

☑Warning! If this door is to be electrically operated, do not install the pull rope. The use of a pull rope on a non-manually operated door can cause serious injury.

For manually operated doors attach an **eye screw** to the jamb at about 50" from the floor. Tie one end of **pull rope** to roller stem on bottom fixture between the two tabs that hold the roller. Tie other end of the rope to eye screw.

Complete installation of stop molding on jambs and header where applicable.

Installation of the door into the opening is now complete. Review all previous steps and make sure they have been followed correctly. Clean work area of any debris and packing material. You are now ready to begin installing the spring system.

Torsion and Extension Springs

The instructions will split into separate sections for the spring installation details.
Torsion Springs pages 18 - 22
Extension Springs pages 23 - 26
Supplemental Details for Low Headroom pages 27-32

Torsion Spring Assembly Details

Spring systems will vary according to the door model, size and options. While you are assembling the spring line, take time to study the parts and identify them.

Torsion Springs: Torsion springs supply the force to raise the weight of the door. Torsion springs are under tension and rotate about a shaft as they operate. Initial tension is loaded into springs using spring winding bars (not supplied). Torsion springs come in different coil diameters, wire sizes and lengths. Each torsion spring has a retainer and a winding plug mounted on the ends. The retainer holds one end of the spring stationary and is mounted to a spring bracket. The winding plug at the other end of the spring is fastened to the shaft with set screws and transfers spring force to the spring shaft. See illustration on page 20.

Spring Shaft: The spring shaft transfers force from the springs to the cable drums.

Cable Drums: Cable drums transfer spring force to the door by use of lift cables.

Spring Bracket: Holds spring system to wall.

End Bearing Plates: End bearing plates support the spring shaft and allow it to rotate freely while door is moving.

Check all spring assembly instructions and parts.
☑ Warning! If there appears to be any parts missing stop here and contact your C.H.I door supplier immediately. Do not substitute parts.
☑ Warning! Do not remove any factory applied spring tag or warning label! If any tags or labels are missing or unreadable, contact your C.H.I. door supplier immediately.

Secure door in fully closed position.
☑ Warning! Securing door in the fully closed position will prevent any unexpected door movement while you are working on the spring system. Failure to do so could result in serious injury or death.

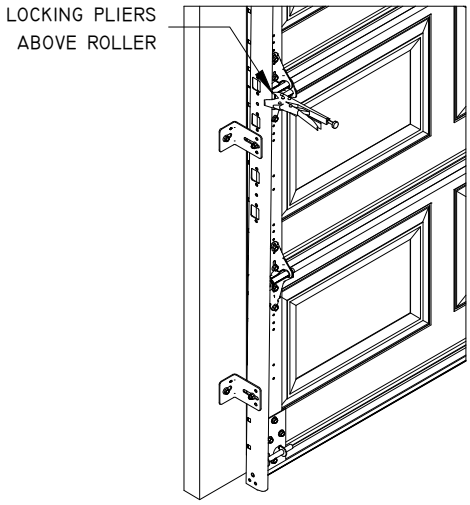

SECURE DOOR USING THE LOCK. IF YOUR DOOR IS NOT EQUIPPED WITH A LOCK, ATTACH LOCKING PLIERS TO EACH VERTICAL TRACK JUST ABOVE ROLLERS AT THE SECOND HINGE LINE (FROM BOTTOM OF DOOR).

Install end bearing plates.
(low headroom supplemental details page 29)

STEP 1

Attach end bearing plates to the horizontal angle using (2) 3/8" x 3/4" carriage bolts and nuts. Always place heads of the bolts on same side as door sections. This will prevent rollers from striking the bolts. Where headroom permits, always mount bearing plate using the lower set of slots to raise spring line as high as possible.

STEP 2

Fasten return flange of bearing plate to the jamb using a Red 5/16" x 1-5/8" wood lag.

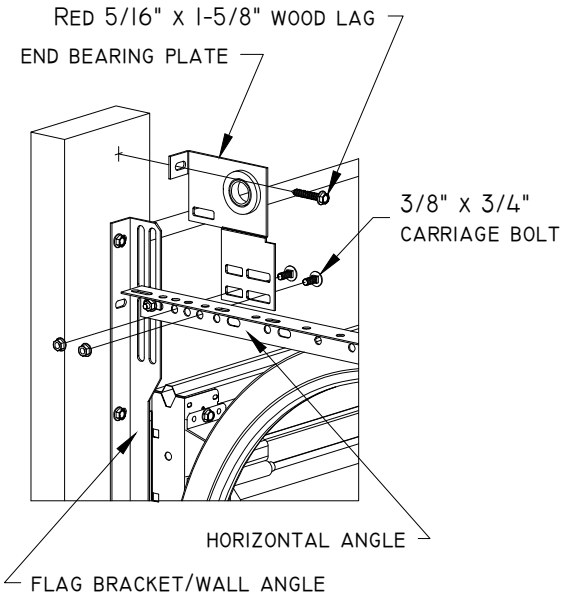

Mount spring support.
(low headroom supplemental details pages 30 and 31)

STEP 1

Snap a chalk line across top of end plates onto the spring anchor pad.

STEP 2

Position top of spring support 3/4" above the reference line.

STEP 3

Fasten spring bracket to spring pad using (2) red 5/16" x 1-5/8" wood lags.

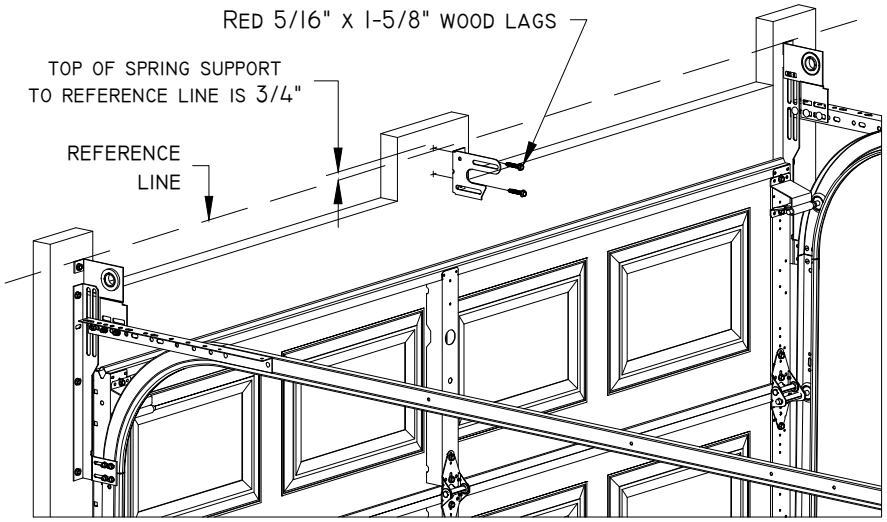

☑Warning! Excessive torque can strip out threads of bolts and cause lag screw failure in wood. Always install lags in spring anchor pads with caution.

Identify torsion springs.
Springs are single or in pairs based on door design and track system. It is important to determine the 'wind' of a spring before installation. A 'right hand wound spring' will have a red winding plug. A 'left hand wound spring' will have a black winding plug. Cable drums are also color coded. The red drum will be on the left side of the spring assembly and the black drum on the right side. **Match color of winding plug on spring with drum** (For low headroom details see page 30).

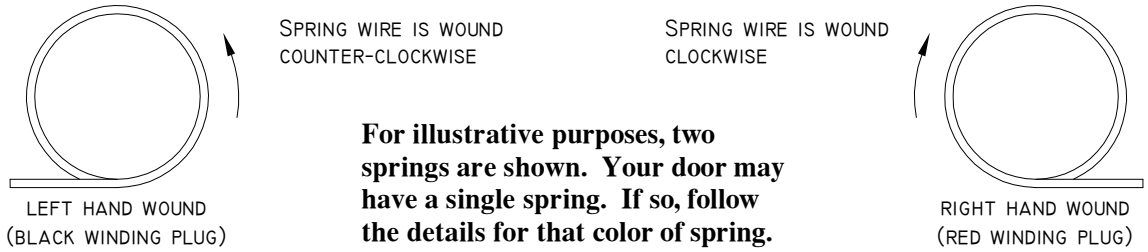

For illustrative purposes, two springs are shown. Your door may have a single spring. If so, follow the details for that color of spring.

Pre-assemble spring line and mount it to spring support.
(low headroom supplemental details for spring and drum placement pages 30 and 31)

STEP 1

SLIDE CABLE DRUMS ONTO TORSION SHAFT. THE NYLON BEARING WILL FIT BETWEEN RETAINER AND SPRING SUPPORT.

STEP 2

LIFT SPRING ASSEMBLY UP TO AN END BEARING PLATE. SLIDE SHAFT THROUGH IT FAR ENOUGH TO ALLOW THE OTHER END TO BE INSERTED INTO OPPOSITE END BEARING PLATE. EQUALLY SPACE SHAFT BETWEEN END BEARING PLATES.

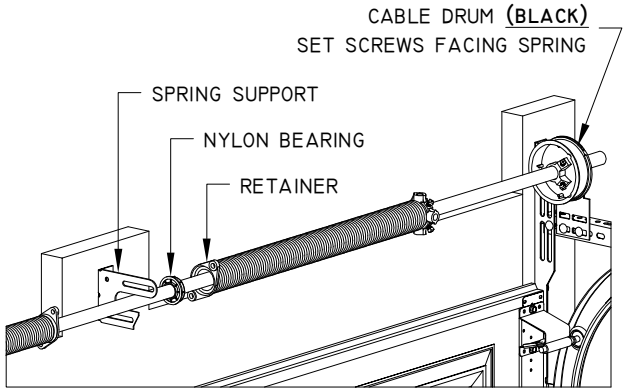

STEP 3

FASTEN SPRING RETAINER TO SPRING SUPPORT USING (2) 3/8" X 1-1/2" HEX BOLTS AND NUTS.

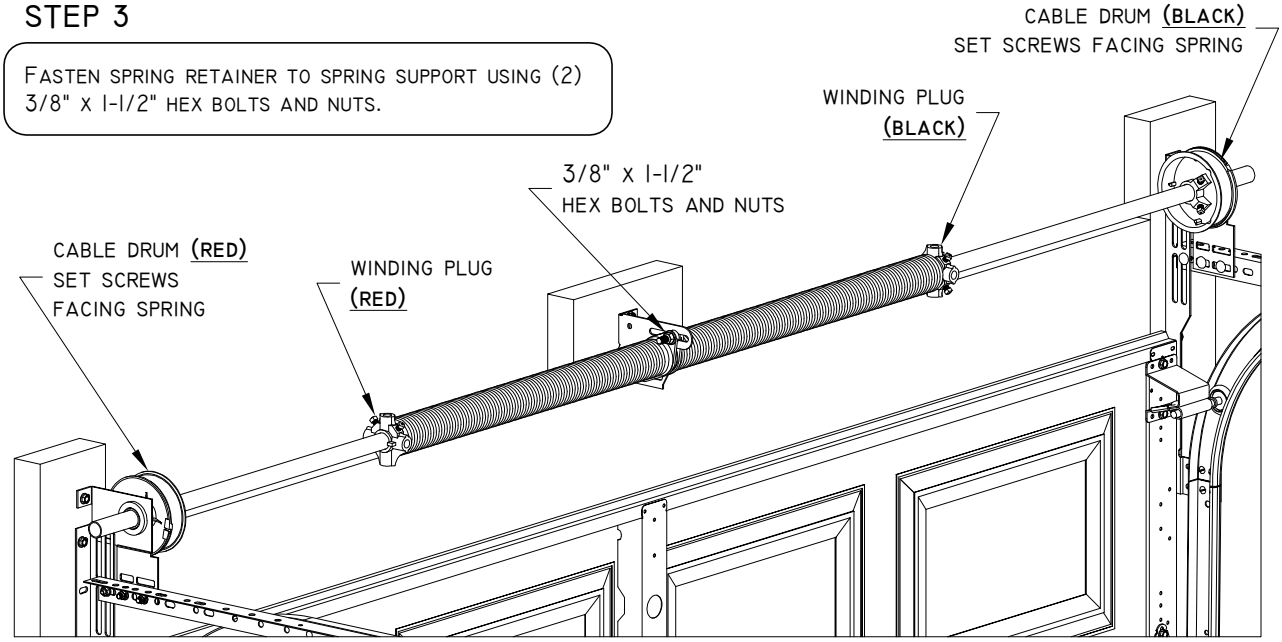

Secure spring shaft and fasten cables to drums.

STEP 1

Position left hand cable drum (red) against end bearing plate. Insert cable into slot on drum edge. Firmly seat the cable lug in the drum. Rotate drum to wind up cable until it is taught. Tighten set screws 1-1/2 turns after set screw touches shaft.

STEP 2

Restrain spring shaft with locking pliers to keep shaft from turning. Use wall to hold locking pliers in place. Movement of shaft may cause slack in cable.

STEP 3

Position right hand cable drum (black) against end bearing plate. Insert cable into slot on drum edge. Firmly seat cable lug in drum. Rotate drum to wind up cable until it is taught. Tighten set screws 1-1/2 turns after set screw touches shaft.

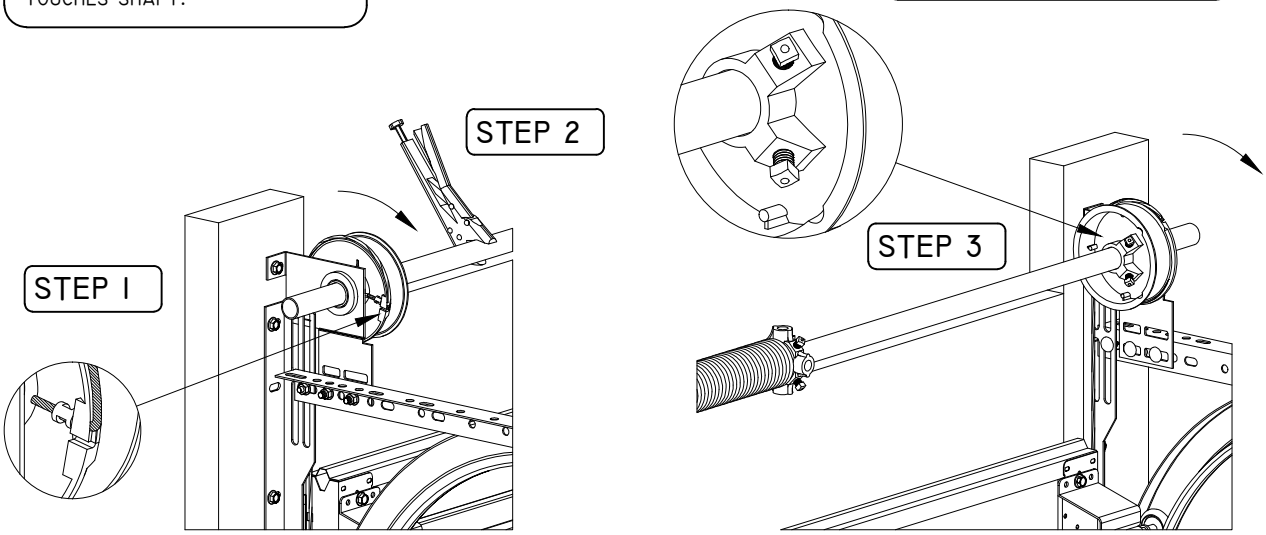

Both drums should now be positioned the same. If not, check that torsion shaft is level with door sections.

Wind torsion springs.
(For low headroom, review supplemental details for spring winding on pages 30 and 31 before continuing)

STEP 1

Mark a chalk line along the length of the springs to count number of turns while winding spring. The approximate number of turns to wind each spring is on tag attached to spring assembly. Leave tag attached to spring assembly for future reference.

☑Warning! Use solid steel winding bars 1/2" in diameter and at least 18" long (not supplied). Be sure that the bar is inserted fully into the winding plug. Use of improper or undersized bars may result in component failure and cause serious personal injury or death. Never use screwdrivers or tubing.

☑Warning! Keep your head and body out of line with the winding bars. Always maintain a secure footing and balance. Firmly grasp the winding bars and be braced to resist strong forces whenever winding springs.

☑Warning! From this point onward, the spring is under tension and extremely dangerous.

STEP 2

Using two winding bars, insert one fully into winding plug and wind spring by pushing in an upward direction. Wind spring one quarter of a turn until second winding bar can be properly inserted. Now, insert second winding bar and push up while cautiously removing first winding bar. Repeat this procedure until the correct number of turns have been wound into spring. Stretch the spring the distance of two wire coils. Tighten set screws 1-1/2 turns after set screw touches shaft. Remove winding bars.

When winding torsion springs, spring diameter will decrease and spring length will increase. If this is not observed, stop immediately and check for proper spring placement.

Resting the winding bar back against the door rather than pushing upward will restrain the spring and allow you to rest during the winding process.

STEP 3

Carefully remove the locking pliers from the shaft.

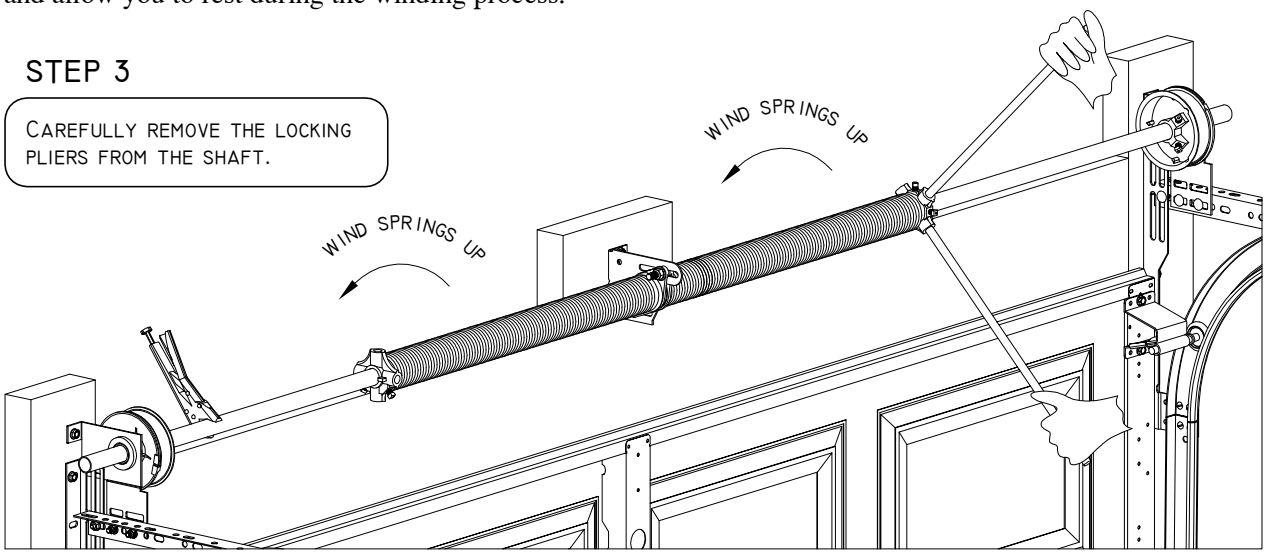

☑Warning! All spring component parts whether part of spring line, attached to door, or attached to wall are now under tension and are extremely dangerous.

☑Warning! Spring adjustments from this point onward must be performed in accordance with all warnings and directions as previously stated.

☑Warning! Never place your fingers in or near section joints while the door is moving.

Remove track restraints and test the balance of the door on the floor.
With door still secured carefully remove lower set of restraints and slowly raise door halfway.
If door does not lift off of the floor by itself, or does not roll back to the floor when not supported, it is properly counterbalanced.
If door lifts off of the floor by itself, the springs are to strong and less spring tension may be required (less turns on the spring).
If the door rolls back to the floor, the springs are too weak and more spring tension may be required (more turns on the spring).

☑Warning! Never exceed number of turns shown on spring tag by more than one full turn.

Finalize track and spring adjustments.
If you did not complete steps 1 through 3 on page 17, please do so now.
Operate door through one full cycle. Check door stops and top fixture for proper seal. If door is not functioning correctly, check for binding against jamb, header or tracks. If no obstructions are observed, attempt to correct situation by adjusting spring tension.

Extension Spring Assembly Details

Extension Spring systems require manually lifting the door into the open position before installing the springs. Your door is heavy and will require more than one person to lift it. Make sure adequate help is available before continuing on with the installation.

Take time to study the parts and identify them.
Extension Springs: Extension springs mount alongside the horizontal track. They stretch as door is closed and contract as door opens. This type of spring is always used in pairs, one on each side of the door. Both springs are the same, it will not matter which one you assemble first.

Safety Cable: Extension springs can cause severe damage, personal injury or even death if they are not properly restrained. In the event of a spring failure the safety cable will prevent the spring from being propelled away from the door.

Check all spring assembly instructions and parts.
☑Warning! If there appear to be any parts missing stop here and contact your C.H.I. door supplier immediately. Do not substitute parts.

☑Warning! Never place your fingers in or near section joints while the door is moving.

For low headroom, review supplemental details on page 32 before continuing.

STEP 1

Attach pulley with a 3/8" x 1-1/2" bolt and hex nut on angle which attaches horizontal track to flag angle. Repeat this step for opposite side of door.

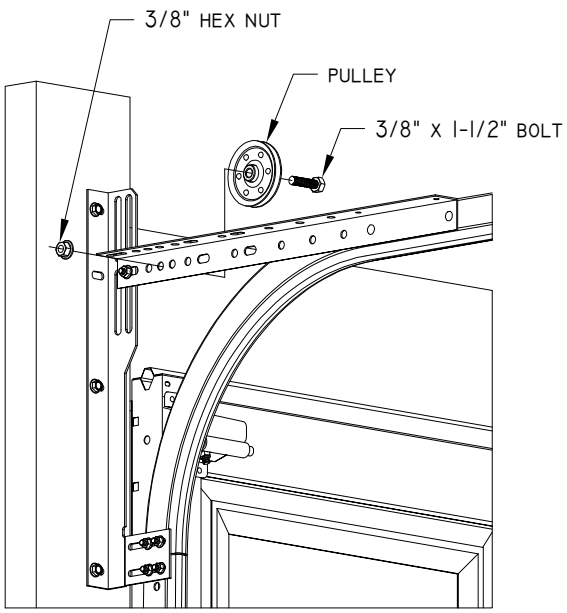

STEP 2

With a minimum of two people, raise door to fully open position. Secure it firmly at both sides with locking pliers.

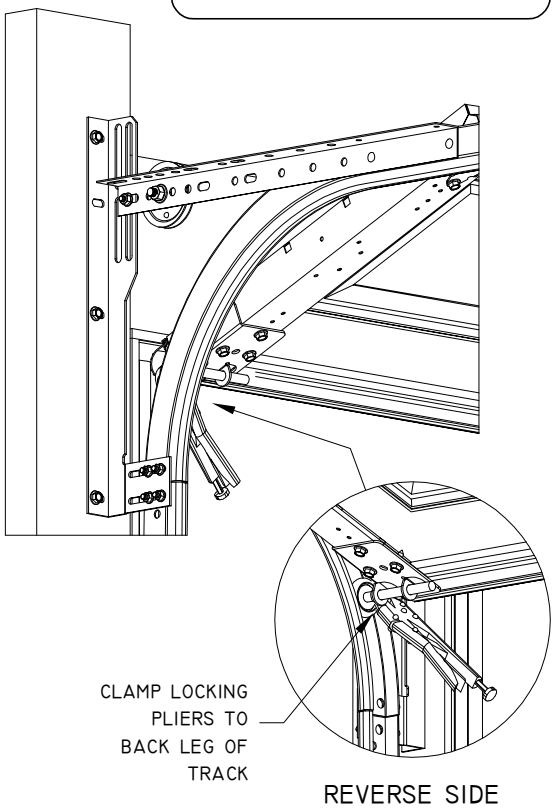

STEP 3

Assemble spring as shown. Bolt a clevis and pulley on one end.

Both springs are the same, it will not matter which one you assemble first.

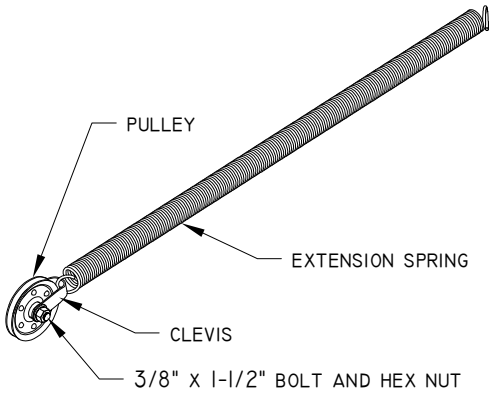

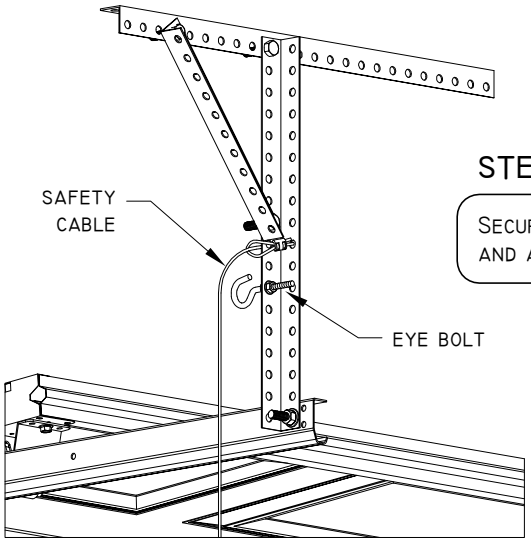

STEP 4

Securely loop safety cable around back hang and attach eye bolt.

☑**Warning! Extension springs can cause severe damage, personal injury or even death if they are not properly restrained. In the event of a spring failure the safety cable will prevent the spring from being propelled away from the door**.

STEP 5

Thread safety cable through spring assembly. Hang spring assembly on eye bolt.

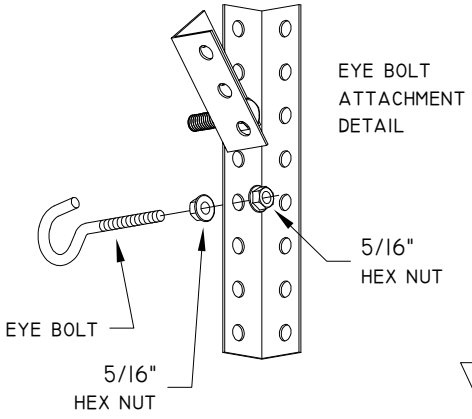

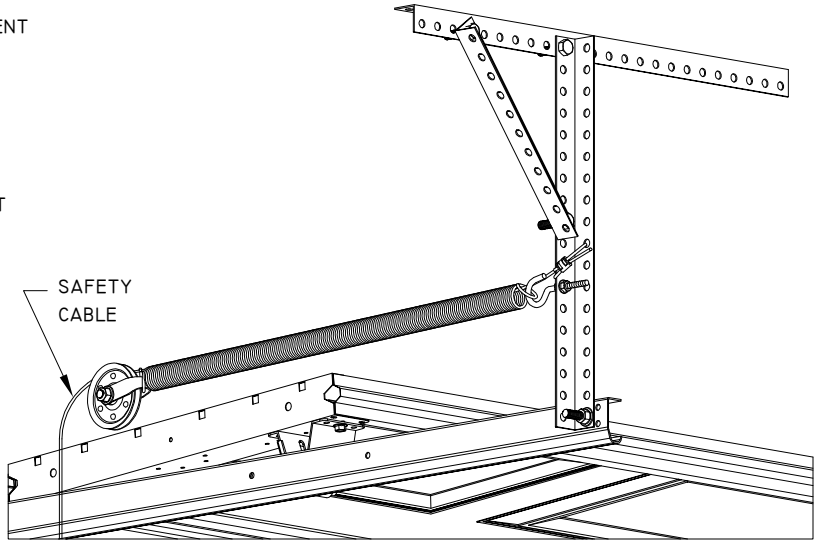

STEP 6

Attach spring cable loop to bottom fixture stud and thread spring cable over pulley

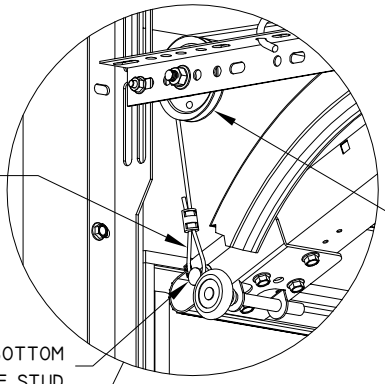

STEP 7

Thread spring cable around spring pulley.

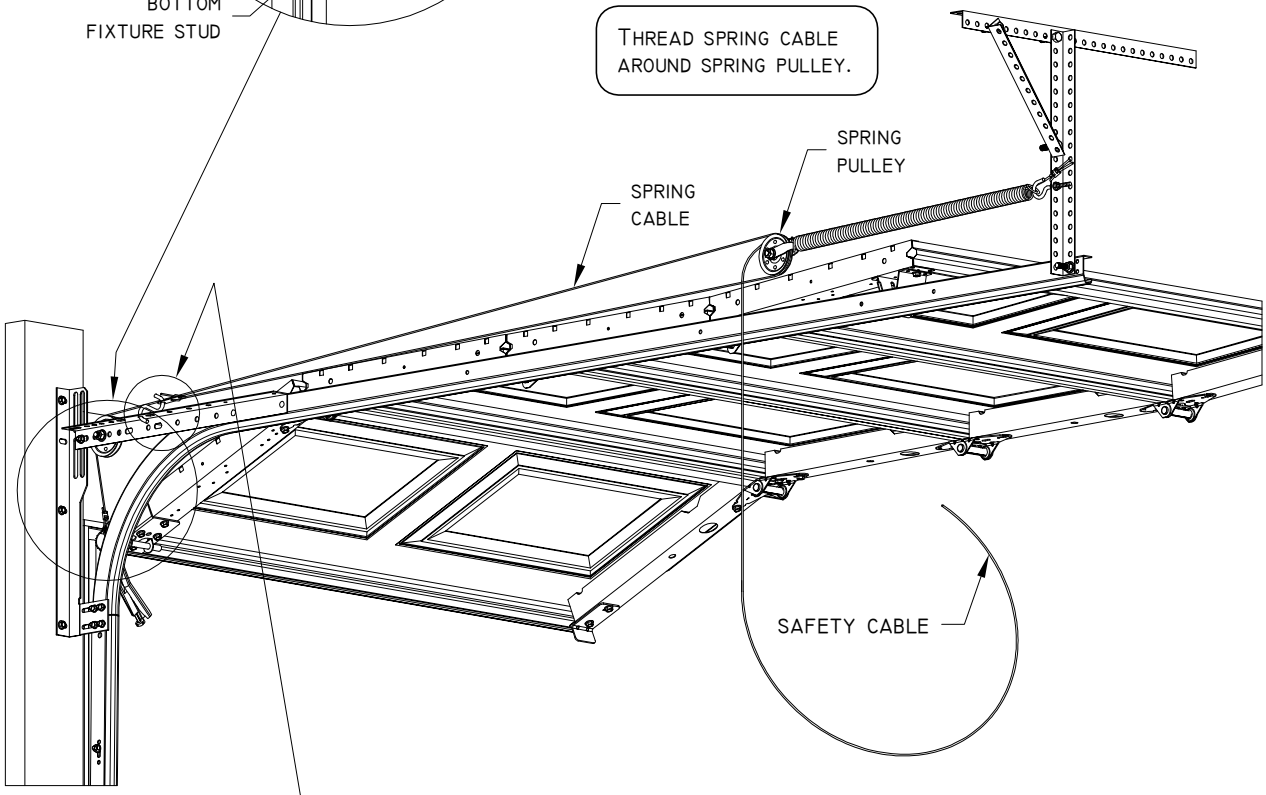

STEP 8

Tie a cable clip to the spring cable and connect it to an S-hook.

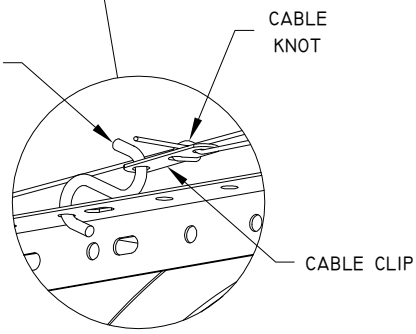

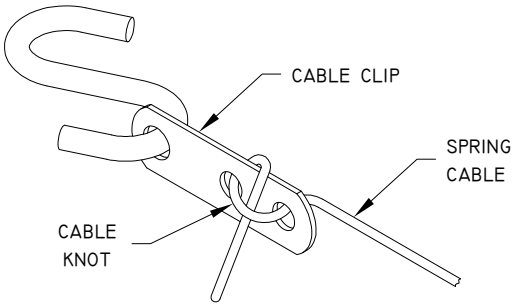

STEP 9

Stretch spring 2"-3" and clip the S-hook to a hole in the horizontal angle. This is referred to as initial stretch and may need adjustment (see end of extension spring assembly details).

STEP 10

LAG SAFETY CABLE LOOP PLATE TO FRONT WOOD JAMB AND TIE ON THE CABLE.

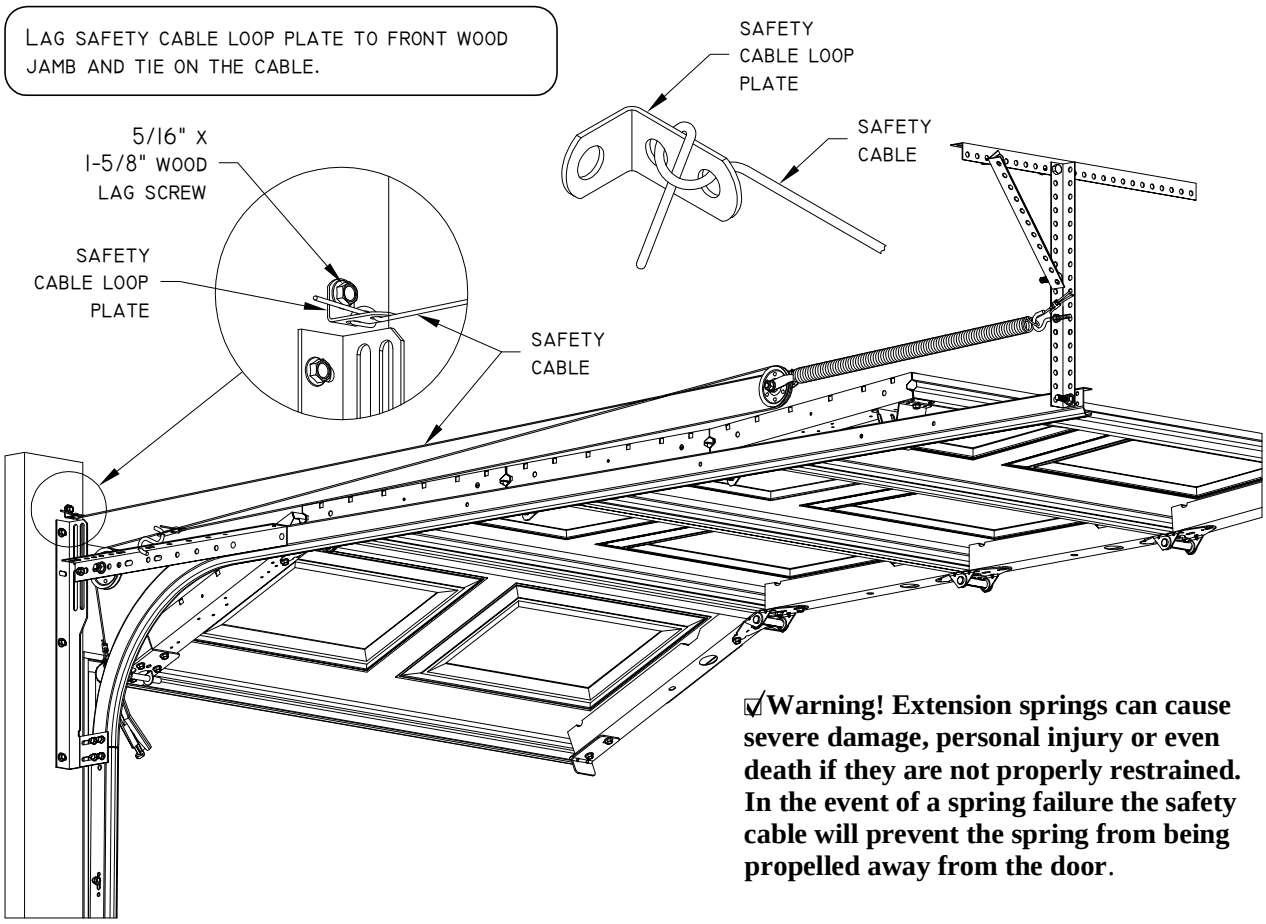

☑Warning! Extension springs can cause severe damage, personal injury or even death if they are not properly restrained. In the event of a spring failure the safety cable will prevent the spring from being propelled away from the door.

Repeat steps 3 through 10 for the other spring.

Lowering the door and spring adjustment.

☑Warning! Until all adjustments are completed, always assume you will have to physically support the full weight of the door. Make sure adequate help is available.

☑Warning! Never place your fingers in or near section joints while the door is moving.

☑Warning! All spring component parts whether part of the spring assembly, attached to the door, or attached to the wall are now under tension and are extremely dangerous.

☑Warning! Spring adjustments from this point onward must be performed in accordance with all warnings and directions as previously stated.

☑Warning! Spring adjustments can only be performed when door is in fully open position and door restraints are applied to tracks.

With one person holding door in the fully open position, carefully remove door restraints.
Slowly lower door, testing the balance of the springs. If door does not lift off of the floor by itself, or does not roll back to the floor when not supported, it is properly counterbalanced.
If door lifts off of floor by itself, the springs are too strong and the initial stretch must be reduced (see step 9).
If door rolls back to floor, the springs are too weak and the initial stretch must be increased (see step 9).

Finalize the track adjustments

Operate door through one full cycle. Check door stops and top fixture for proper seal. If door is not functioning correctly, check for binding against jamb, header or tracks.

Low Headroom Details

Installation of low headroom doors is basically the same as standard lift doors. Certain differences do however require additional details. All low headroom doors will have a pair of double horizontal curve tracks. The upper track is used for the low headroom-top fixture rollers. All other rollers travel in the lower track. This allows the top section to 'turn over' quickly and requires less headroom.

Sideroom Requirements for Low Headroom Doors

TRACK TYPE	BOTTOM OF DOOR	TORSION SHAFT
2" TRACK	DOOR WIDTH + 6"	DOOR WIDTH + 12"

Headroom and Back depth Requirements for Low Headroom Doors

SPRING MOUNT	SPRING TYPE	"A" DIMENSION	"B" DIMENSION
SPRINGS FRONT	TORSION	10"	DOOR HEIGHT + 22"
SPRINGS REAR	EXTENSION	6"	DOOR HEIGHT + 22"
	TORSION	6"	DOOR HEIGHT + 28"

See page 30 for rear torsion spring mounting area.

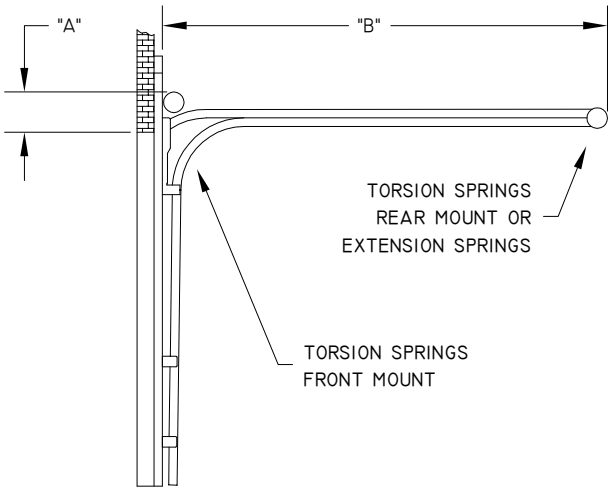

Low Headroom Components

TOP FIXTURE (ONE PAIR)	LOW HEADROOM END BEARING (ONE PAIR)	CURVE TRACK (ONE PAIR)	BOTTOM FIXTURE (ONE PAIR)
		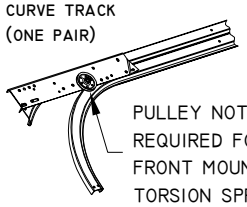 PULLEY NOT REQUIRED FOR FRONT MOUNT TORSION SPRINGS.	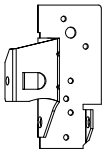

Bottom fixture attachment for low headroom doors.
A low headroom bottom fixture is attached the same as a standard bottom fixture. However, the lift cable attachment is outside the track whereas the lift cable attachment is between the track and bottom section on a standard bottom fixture.

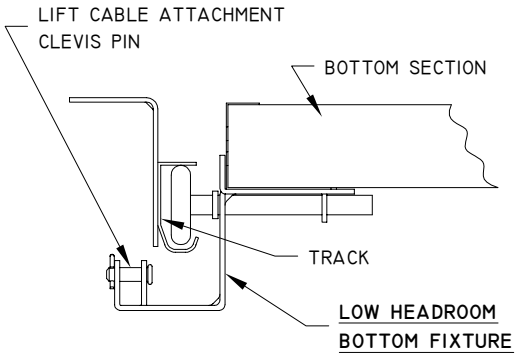

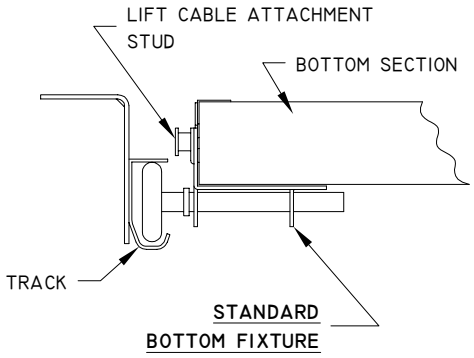

☑Warning! Fasteners used to attach bottom fixtures must be painted red.

Low headroom curve track installation.
Low Headroom doors have double-horizontal tracks that mount to the vertical track assembly and flag bracket.

STEP 1

Temporarily secure back of horizontal curve tracks. See page 16, Steps 1 and 2.

☑Warning! Rope, structural overhead member, attachment and loop, must be capable of safely supporting 400 pounds.

STEP 2

Fasten horizontal curve track to flag bracket with (2) 1/4" x 5/8" track bolts and nuts. Always place heads of bolts to inside of track. This will prevent rollers from striking bolts.

STEP 3

Fasten pulley plate to flag bracket with a 5/16" x 3/4" carriage bolt and nut.

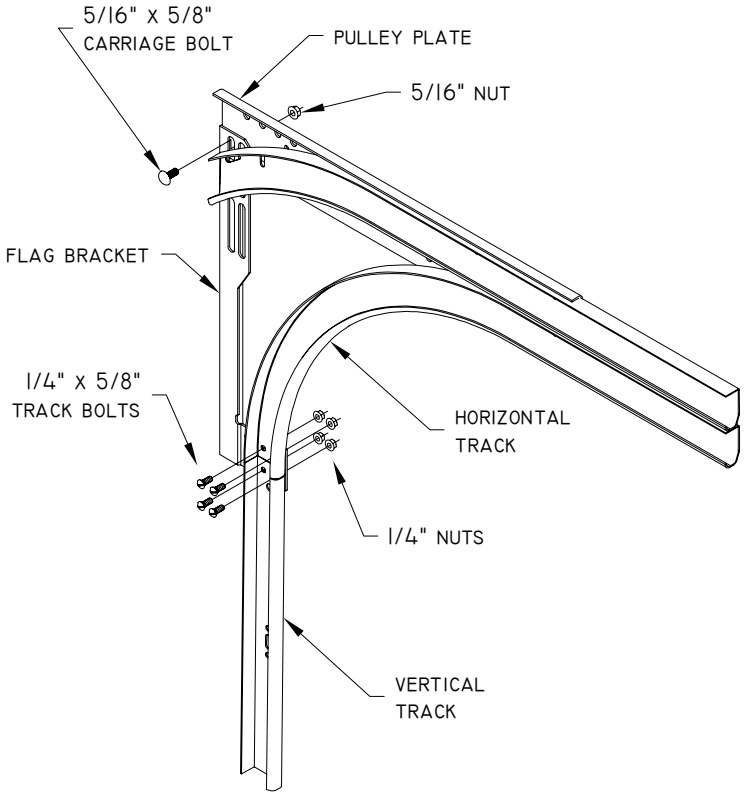

Top fixture attachment for low headroom doors.

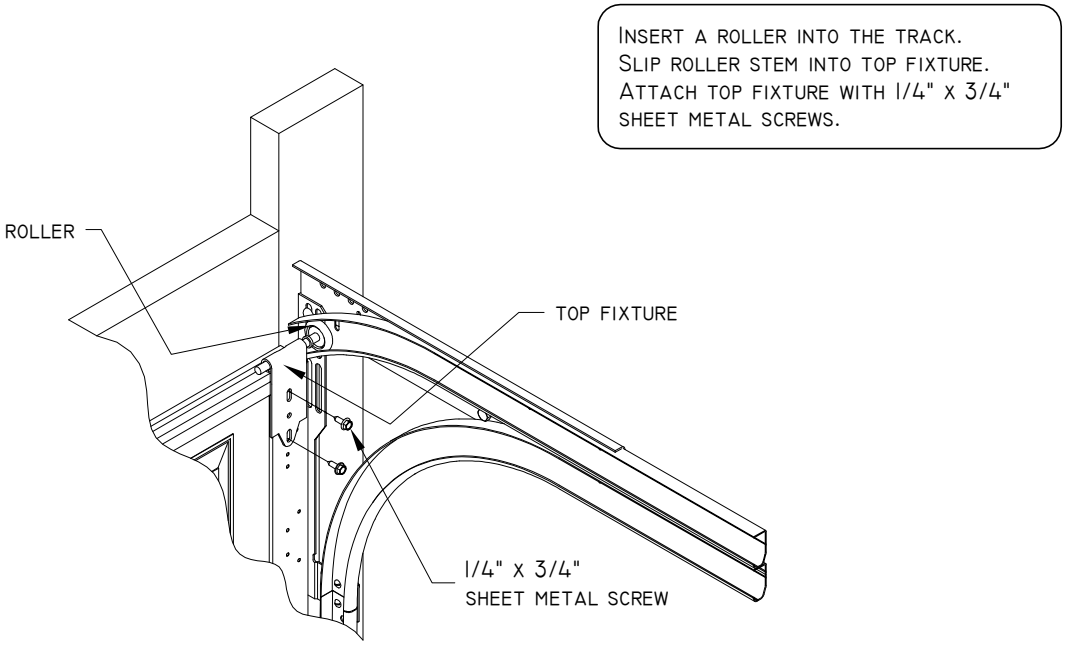

Low Headroom Torsion Spring Assembly Details

End bearing plates for rear mounted springs are factory attached to end of curve track.

End bearing plates for front mounted springs.

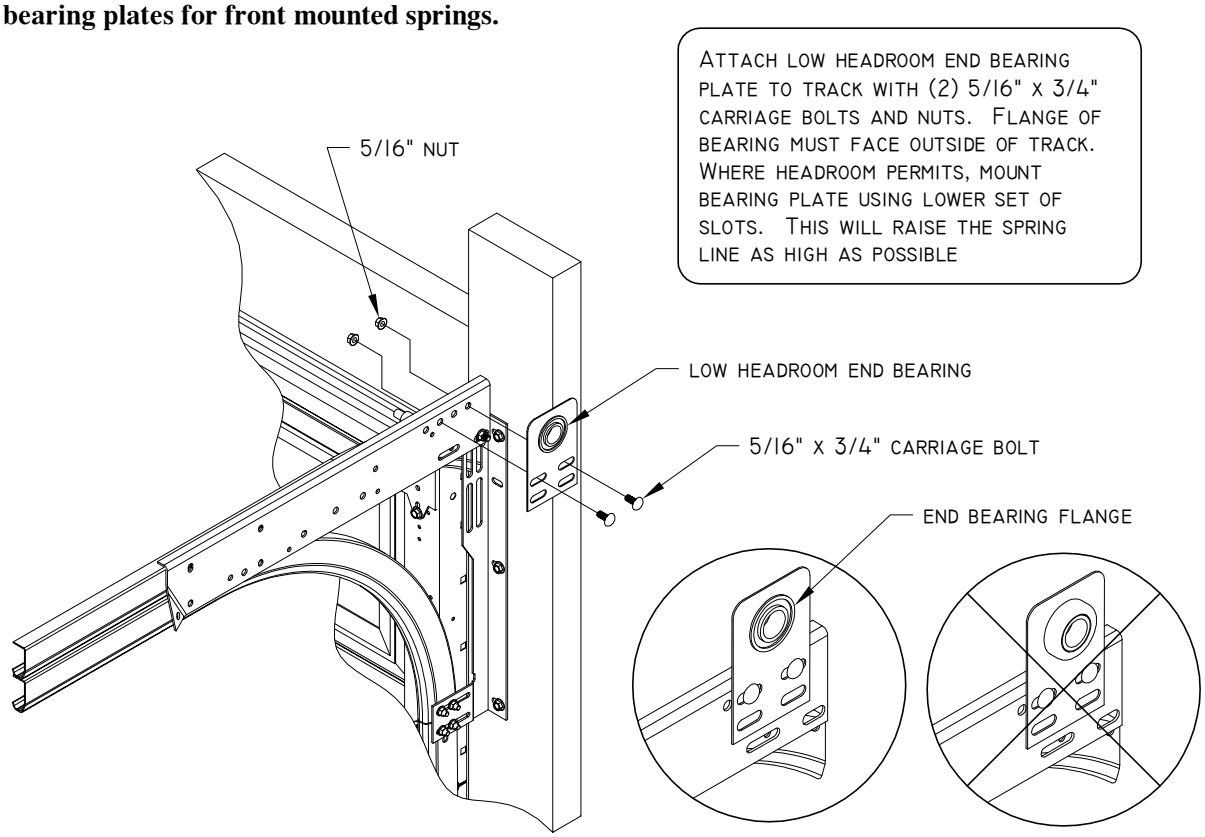

Low headroom torsion springs assemblies.

Low headroom spring installations do not follow the standard rules for spring placement and winding. The main differences are:

1) Cable drums are on the outside of the track.
2) The right hand wound spring (painted red) will face the right hand drum (painted black) and the left hand wound spring (painted black) will face the left hand drum (painted red).
3) Springs are wound down instead of up.
4) Lift cables spool off the back of cable drums.

Front mounted low headroom torsion springs.

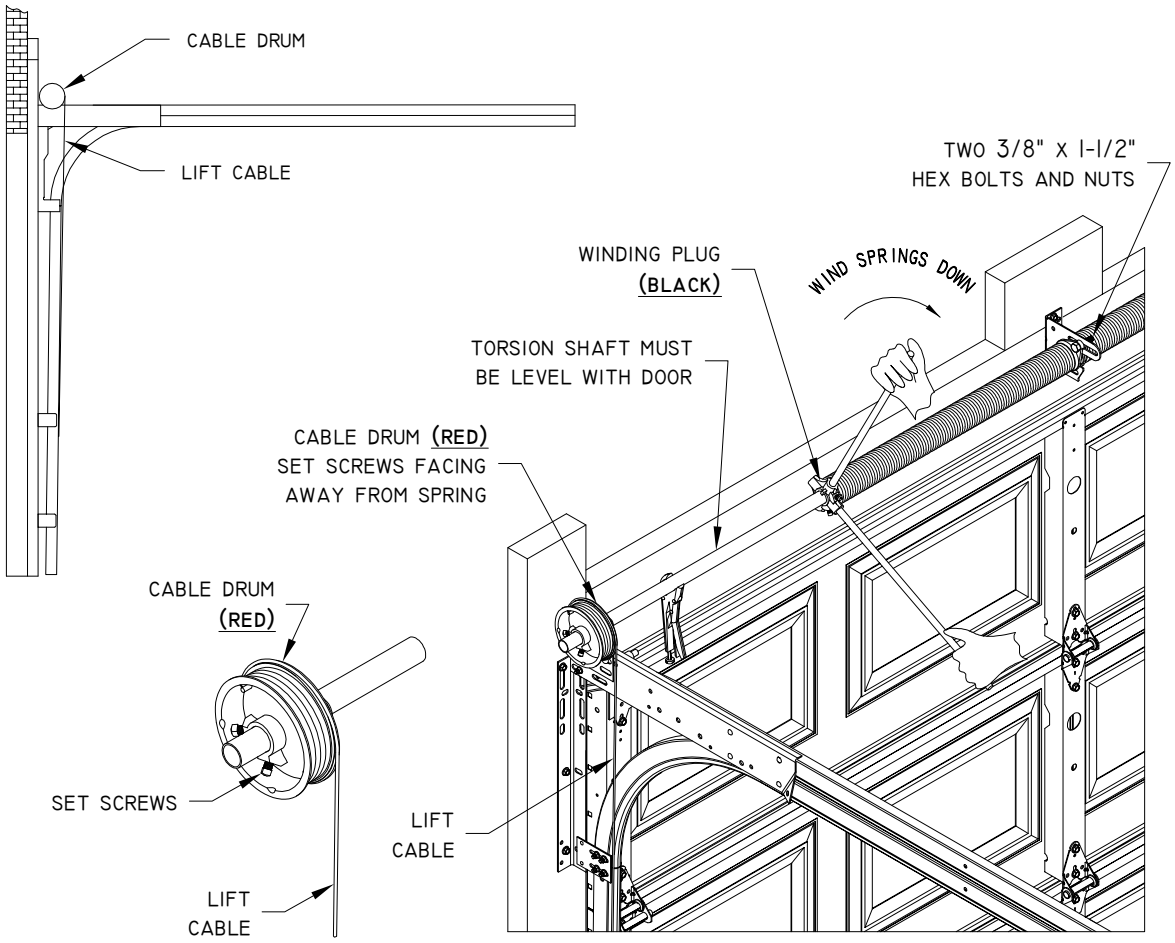

☑ **Warning! Attachment of the torsion spring mounting area to building framework must provide adequate support to sustain the weight of the spring assembly as well as resistance to vibration caused by door operation.**

Low headroom rear mounted torsion springs.

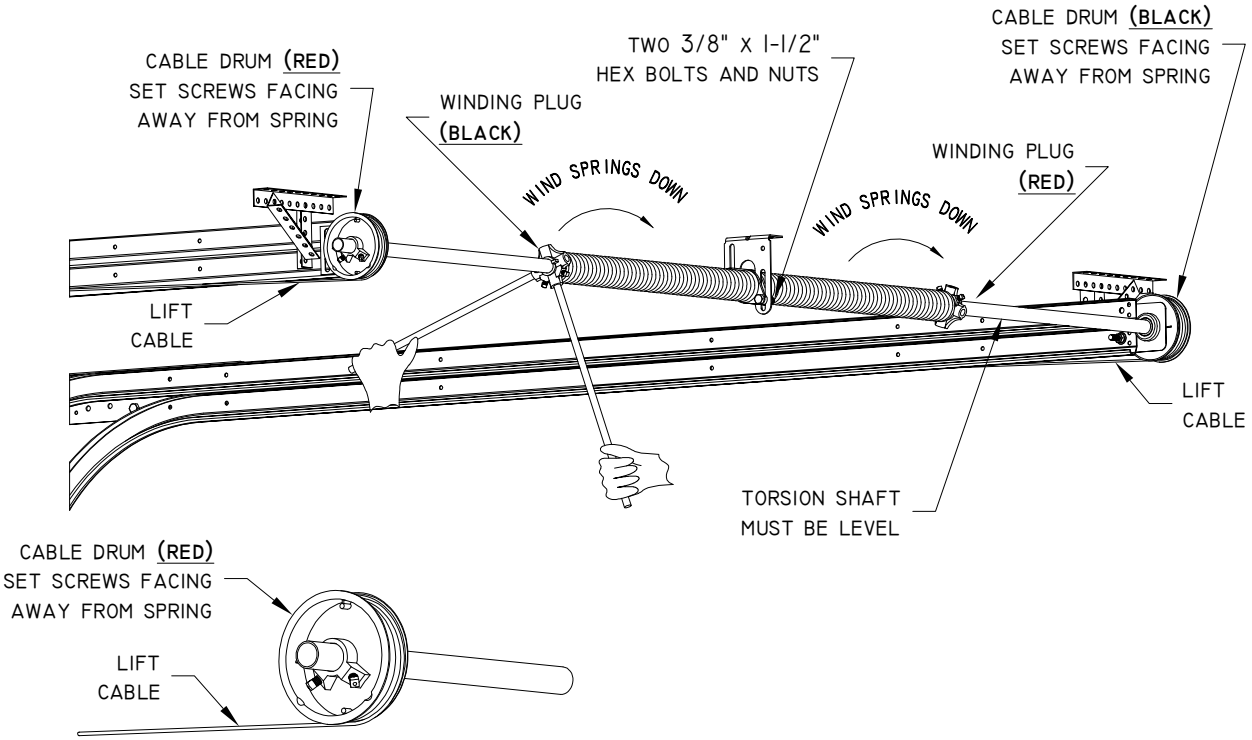

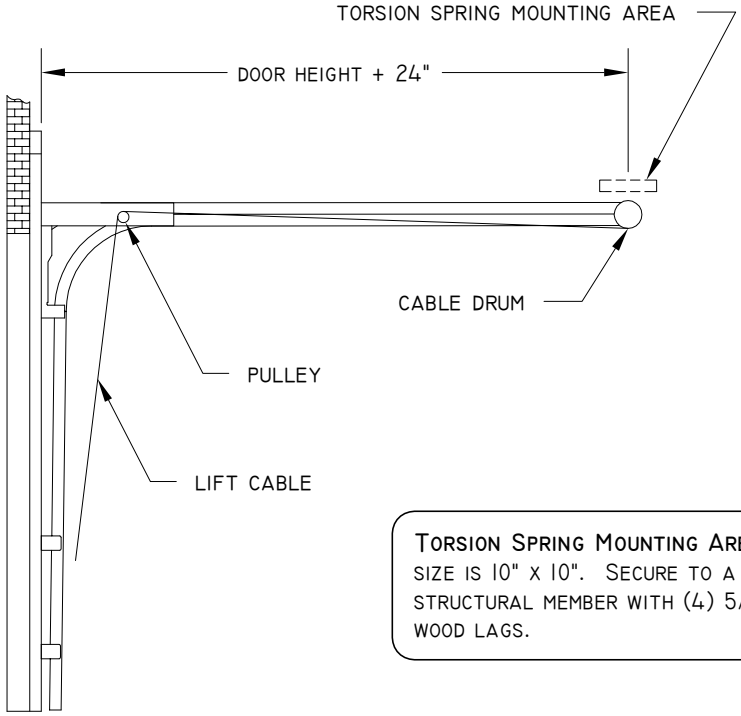

TORSION SPRING MOUNTING AREA MINIMUM SIZE IS 10" X 10". SECURE TO A STRUCTURAL MEMBER WITH (4) 5/16" X 4" WOOD LAGS.

☑ Warning! Attachment of the torsion spring mounting area to building framework must provide adequate support to sustain the weight of the spring assembly as well as resistance to vibration caused by door operation.

Low Headroom Extension Spring Assembly Details

Extension springs on low headroom doors are similar to standard lift with the exception that the springs, cables and pulleys are placed on the outside of the horizontal tracks.

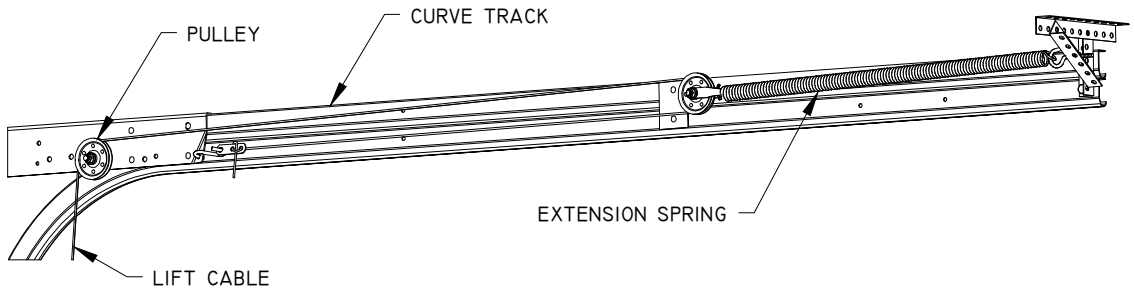

Supplemental Instructions

Incline Track Installation Details

Shown below is a typical standard-lift incline-track layout. A field-located horizontal angle connects the horizontal track to the wall angle / flag angle. Incline track installations will require additional time and material.

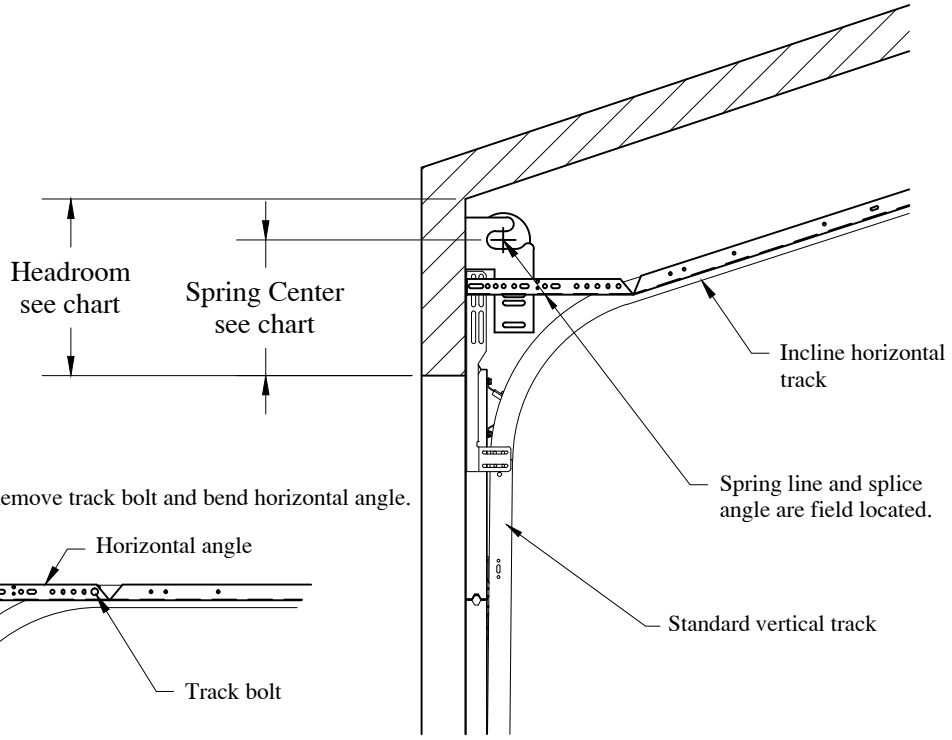

Step one: Remove track bolt and bend horizontal angle.

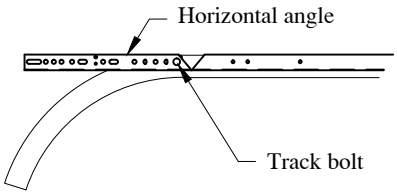

Step two: Insert track bolt in predrilled horizontal track.

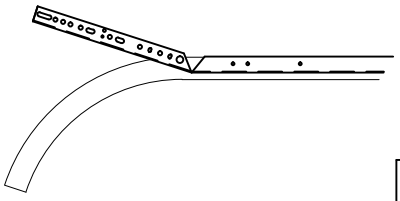

Headroom Chart

	2" Track		3" Track	
Drum Type	Spring Center	Headroom	Spring Center	Headroom
4-8 / 4-12	12"	14-1/2"	13"	15-1/2"
5-18	13"	16"	14"	17"
5-18 w/ 6" springs	15"	18-1/2"	16"	19-1/2"
8-32	N/A	N/A	17-1/2"	22"

Supplemental Instructions

Gripping Point Kit

Bottom Gripping Point/Step Plate Kit

STEP 1

Locate the two holes on the bottom section as shown. Using these holes as a template, drill completely through the section with a 1/4" drill bit.

Sandwich type doors do not have exposed stiles. Centrally locate inside step plate using marks as shown.

STEP 2

On the face of the section, redrill holes to 7/16". This will accommodate threaded posts on outside gripping point.

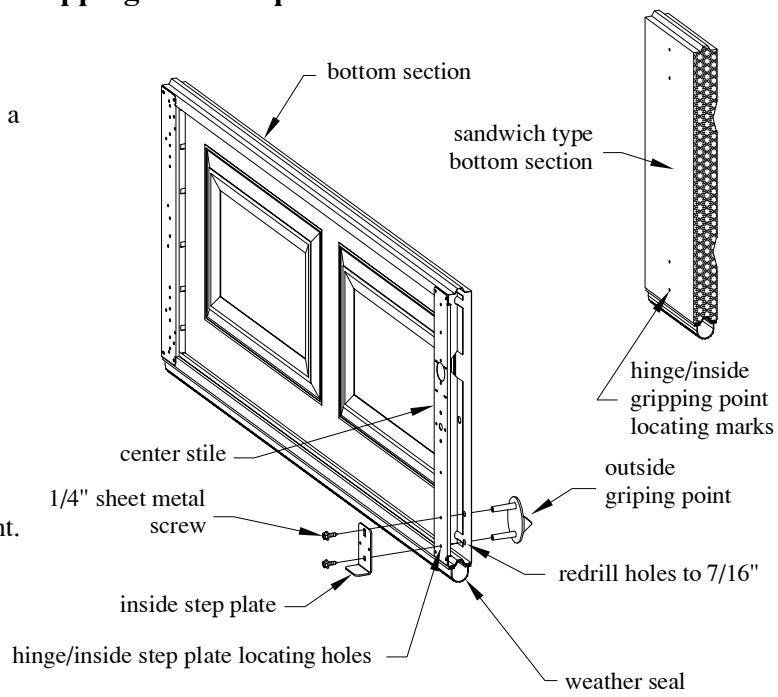

Intermediate Gripping Point Kit

STEP 1

Locate the two holes on the #2 section as shown. Using these holes as a template, drill completely through the section with a 1/4" drill bit.

On sandwich type doors, center the inside gripping point between hinge locations. Mark the hole pattern and drill 1/4" holes through the section.

STEP 2

On the face of the section, redrill holes to 7/16". This will accommodate threaded posts on outside gripping point.

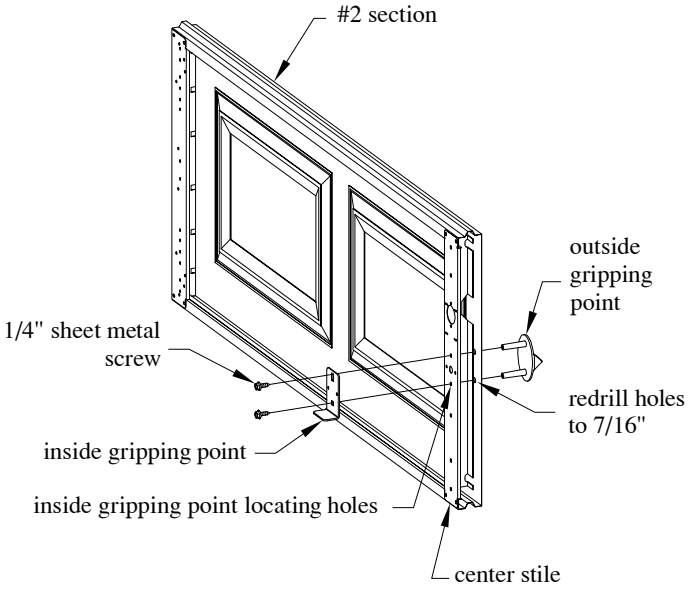

Supplemental Instructions

Outside Lock

Install outside lock on section #2. Use center stile for even panel sections or a stile closest to the center for odd panel sections.

STEP 1

If the door has exposed stiles as shown, drill three 3/16" holes through the #2 section using pre-punched lock holes for a guide. On sandwich type doors, center the outside handle plate on the section face. Mark the hole pattern and drill three 3/16" holes through the section.

STEP 2

Drill three 1/2" holes into the section face. drill completely through the section for the middle hole.

STEP 3

install lock assembly in section.

STEP 4

Attach a snap latch assembly to each end stile.

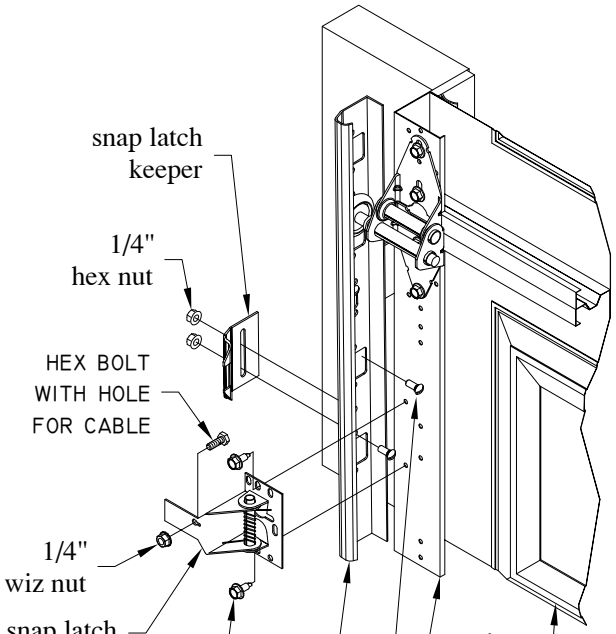

STEP 5

Attach a latch keeper to each vertical track.

STEP 6

thread cable through right hand snap latch, then through the inside handle.

STEP 7

Insert the hex bolt through left hand snap-latch and thread end of cable though hole in bolt. Tighten wiz nut one-quarter turn past snug.

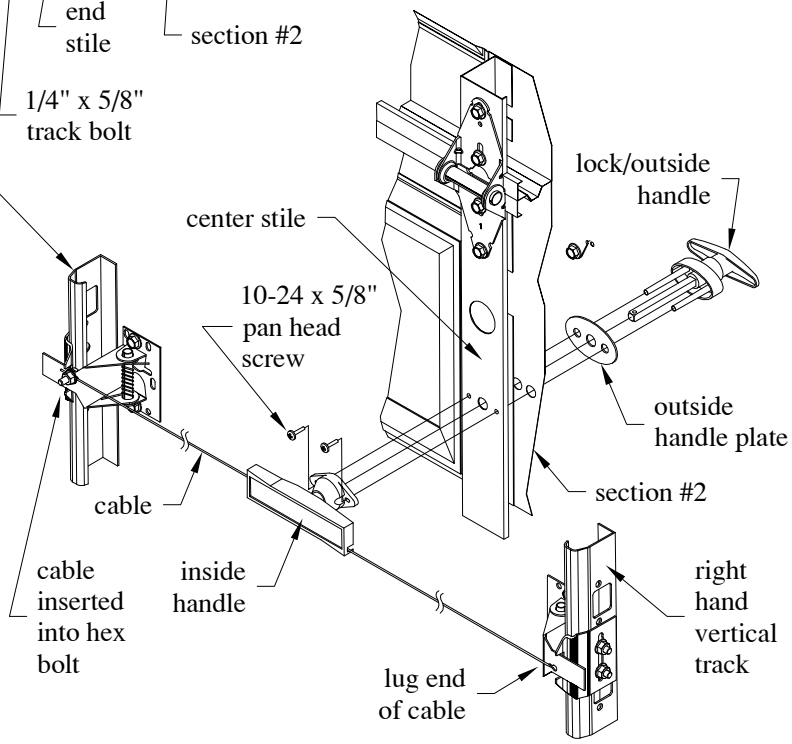

C.H.I.

OVERHEAD DOORS